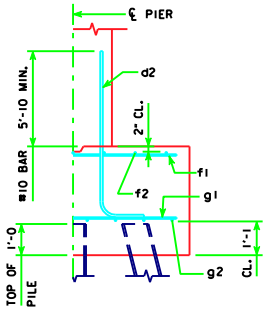

TYPICAL SECTION

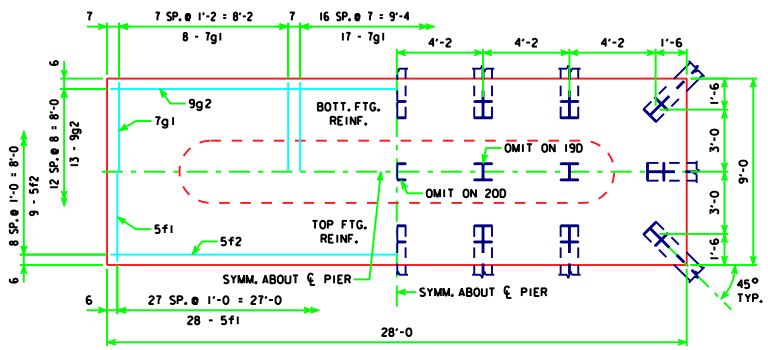

4'-0 x 9'-0 x 28'-0 FOR 19D, 20D & 21C

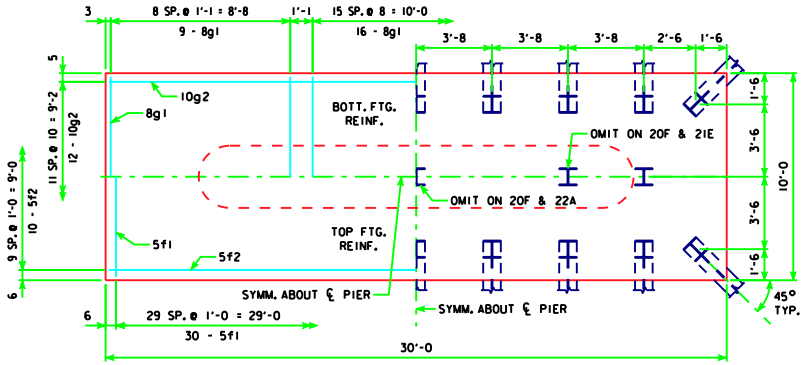

4'-0 x 10'-0 x 30'-0 FOR 20F, 21E & 22A

H IN FT.	℄ - ℄ ABUT. BRG.	PILING NO. & LAYOUT	PILING DES. BRG. (TONS)	FOOTING SIZE
25 TO 27	201'-4	19D	49	4' x 9' x 28'
	213'-10	20D	48	
	226'-4	20D	50	
	243'-0	21C	50	
28 TO 30	201'-4	20E	47	4' x 9' x 30'
	213'-10	20E	48	
	226'-4	20E	50	
	243'-0	21D	50	
31 TO 33	201'-4	20F	48	4' x 10' x 30'
	213'-10	20F	49	
	226'-4	21E	49	
	243'-0	22A	48	
34 TO 36	201'-4	20G	49	4' x 10' x 31'
	213'-10	20G	50	
	226'-4	21F	50	
	243'-0	22B	50	
37 TO 40	201'-4	20G	50	4' x 10' x 31'
	213'-10	21F	50	
	226'-4	22B	49	
	243'-0	22B	50	

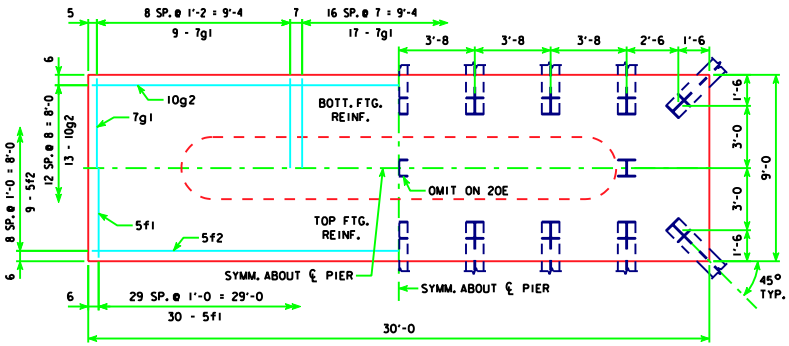

4'-0 x 9'-0 x 30'-0 FOR 20E & 21D

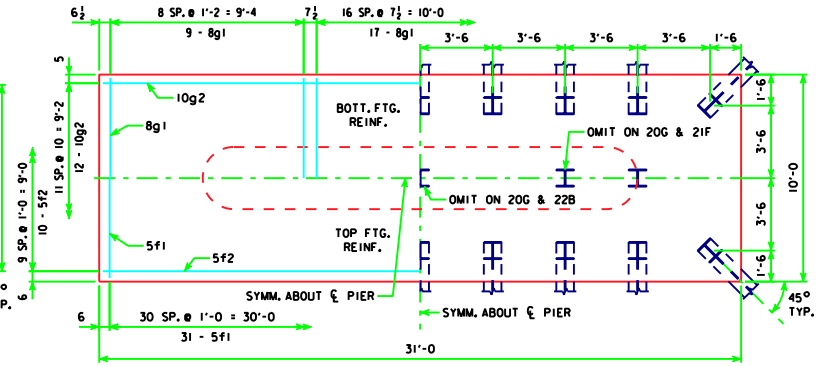

4'-0 x 10'-0 x 31'-0 FOR 20G, 21F & 22B

FOOTING SIZE	REINFORCING STEEL (ONE FOOTING) BAR	NO., SIZE & SPACING	LENGTH	WEIGHT (LB.)	TOTAL WEIGHT (LB.)	STRUCTURAL CONCRETE (CY)
4' x 9' x 28'	d2	50 - #10 AS SHOWN	10'-6	2259	4580	37.3
	f1	28 - #5 @ 1'-0	8'-8	253		
	f2	9 - #5 @ 1'-0	27'-8	260		
	g1	33 - #7 AS SHOWN	8'-8	585		
	g2	13 - #9 @ 0'-8	27'-8	1223		
4' x 9' x 30'	d2	50 - #10 AS SHOWN	10'-6	2259	5088	40.0
	f1	30 - #5 @ 1'-0	8'-8	271		
	f2	9 - #5 @ 1'-0	29'-8	278		
	g1	35 - #7 AS SHOWN	8'-8	620		
	g2	13 - #10 @ 0'-8	29'-8	1660		
4' x 10' x 30'	d2	50 - #10 AS SHOWN	10'-6	2259	5280	44.4
	f1	30 - #5 @ 1'-0	9'-8	302		
	f2	10 - #5 @ 1'-0	29'-8	309		
	g1	34 - #8 AS SHOWN	9'-8	878		
	g2	12 - #10 @ 0'-10	29'-8	1532		
4' x 10' x 31'	d2	50 - #10 AS SHOWN	10'-6	2259	5379	45.9
	f1	31 - #5 @ 1'-0	9'-8	313		
	f2	10 - #5 @ 1'-0	30'-8	320		
	g1	35 - #8 AS SHOWN	9'-8	903		
	g2	12 - #10 @ 0'-10	30'-8	1584		

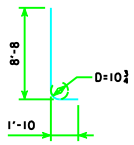

d2

NOTE: D = PIN DIAMETER.
DIMENSIONS ARE OUT TO OUT.

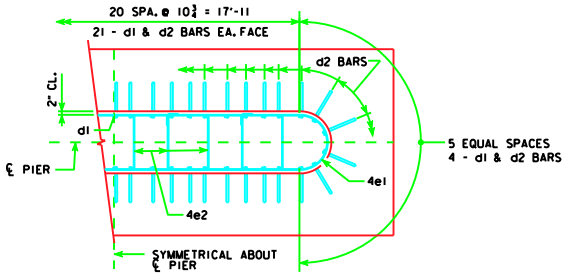

d2 BAR LAYOUT
(SEE SECTION A-A ON SHEET H44-56-07.)

NOTE:
SEE SHEET H44-58-07 FOR FOOTING NOTES.

LATEST REVISION DATE

APPROVED BY BRIDGE ENGINEER

Iowa Department of Transportation
Highway Division

STANDARD DESIGN - 44' ROADWAY, THREE SPAN BRIDGE
PRETENSIONED PRESTRESSED CONCRETE BEAM BRIDGES
HL93 SUPERSTRUCTURE MARCH, 2007 HS25 SUBSTRUCTURE

TEE PIER - STEEL PILE FOOTINGS, H=25' TO 40'
30° SKEW

H44-59-07