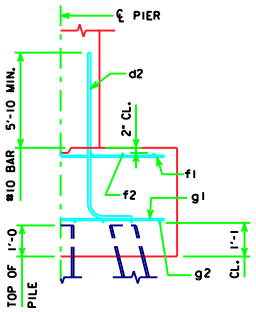

TYPICAL SECTION

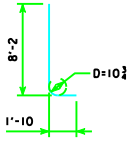

d2

NOTE: D = PIN DIAMETER.
DIMENSIONS ARE OUT TO OUT.

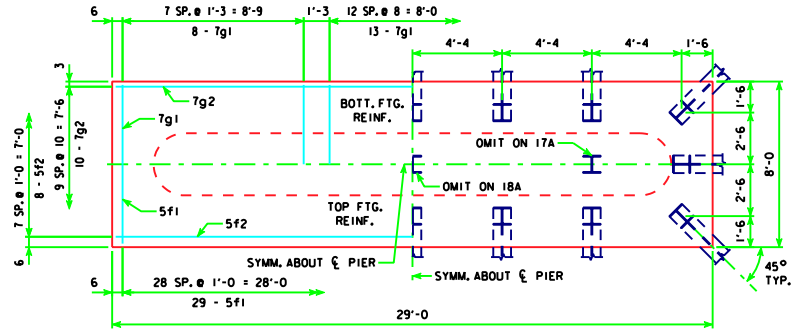

3'-6 x 8'-0 x 29'-0 FOR 17A, 18A & 19A

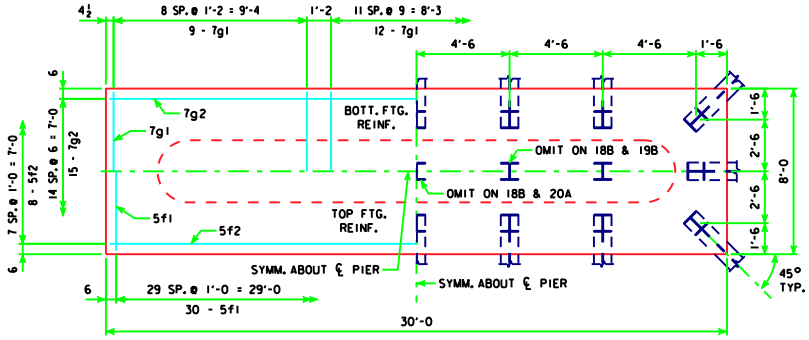

3'-6 x 8'-0 x 30'-0 FOR 18B, 19B & 20A

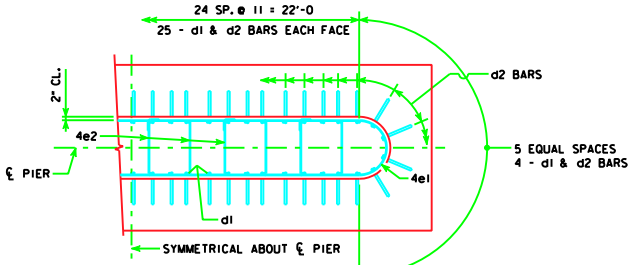

d2 LAYOUT
(SEE SECTION A-A ON SHEET H40-71-06.)

H IN FT.	℄ - ℄ ABUT. BRG.	PILING NO. & LAYOUT	PILING DES. BRG. (TONS)	FOOTING SIZE
16 TO 18	201'-4	17A	50	3'-6 x 8' x 29'
	213'-10	18A	48	
	226'-4	18A	50	
	243'-0	19A	50	
19 TO 21	201'-4	18B	47	3'-6 x 8' x 30'
	213'-10	18B	49	
	226'-4	19B	49	
	243'-0	19B	50	
22 TO 24	201'-4	18B	48	3'-6 x 8' x 30'
	213'-10	19B	48	
	226'-4	19B	50	
	243'-0	20A	49	

FOOTING SIZE	REINFORCING STEEL (ONE FOOTING) BAR	NO., SIZE & SPACING	LENGTH	WEIGHT (LB.)	TOTAL WEIGHT (LB.)	STRUCTURAL CONCRETE (CY)
3'-6 x 8' x 29'	d2	58 - #10 AS SHOWN	10'-0	2496	4007	30.1
	f1	29 - #5 @ 1'-0	7'-8	232		
	f2	8 - #5 @ 1'-0	28'-8	239		
	g1	29 - #7 AS SHOWN	7'-8	454		
	g2	10 - #7 @ 0'-10	28'-8	586		
3'-6 x 8' x 30'	d2	58 - #10 AS SHOWN	10'-0	2496	4364	31.1
	f1	30 - #5 @ 1'-0	7'-8	240		
	f2	8 - #5 @ 1'-0	29'-8	248		
	g1	30 - #7 AS SHOWN	7'-8	470		
	g2	15 - #7 @ 0'-6	29'-8	910		

FOOTING NOTES:

THESE FOOTINGS ARE DESIGNED AND DETAILED TO BE USED WITH THE CAP AND COLUMN DETAILS OF THE TEE PIERS AS SHOWN ON SHEET H40-71-06.

BATTER PILES IN EXTERIOR ROWS 1:4 IN THE DIRECTION SHOWN.

PIER PILES (HP10x57) ARE TO BE DRIVEN TO THE DESIGN BEARING VALUE.

STEEL PILING USED AS POINT BEARING SHALL HAVE A MINIMUM DISTANCE OF APPROXIMATELY 10 FEET FROM BOTTOM OF FOOTING TO TOP OF BEARING ROCK. THE PILE LAYOUTS ARE SUCH THAT THE DISTANCE CENTER TO CENTER OF ADJACENT PILING SHALL NOT EXCEED 8'-0.

LATEST REVISION DATE

APPROVED BY BRIDGE ENGINEER

Iowa Department of Transportation
Highway Division

STANDARD DESIGN - 40' ROADWAY, THREE SPAN BRIDGE

PRETENSIONED PRESTRESSED CONCRETE BEAM BRIDGES

HL93 SUPERSTRUCTURE DECEMBER, 2006 HS25 SUBSTRUCTURE

TEE PIER - STEEL PILE FOOTINGS, H=16' TO 24'
45° SKEW

H40-73-06