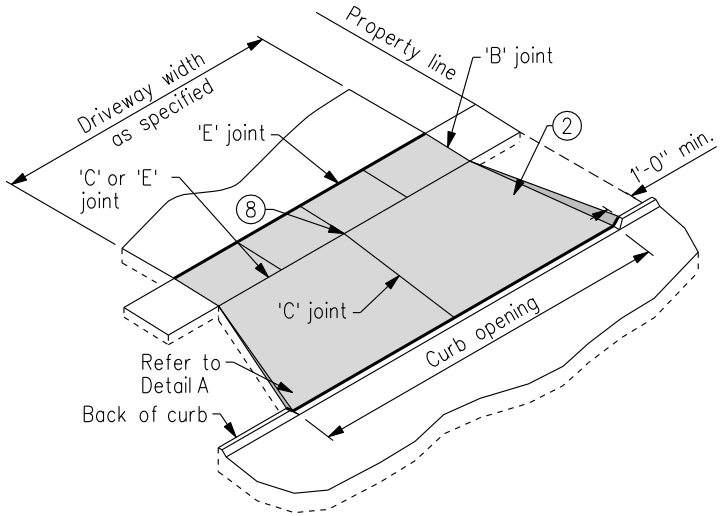

TYPE A WITH FLARES

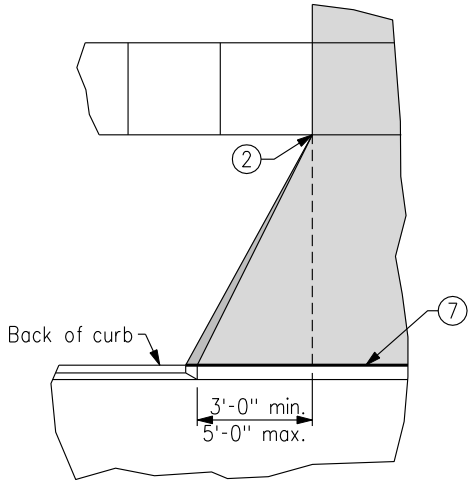

DETAIL A

1. Driveway radius (R).
   Residential: 10 foot minimum, 15 foot maximum.
   Commercial and industrial: As specified in the contract documents.
2. Transition the curb height to 0 inches at end of taper/radius or at the front edge of sidewalk. Do not extend raised curb across sidewalk.
3. Pavement thickness.
   Residential: 6 inches minimum.
   Commercial and industrial: 7 inches minimum.
4. Sidewalk thickness through driveway to match thickness of driveway.
5. Center reinforcing bar vertically in the pavement.
6. Match thickness of adjacent roadway, 8 inches minimum.
7. Provide 'E' joint at back of curb unless 'B' joint is specified.
8. For alleys, invert the pavement crown 2% toward center of alley.

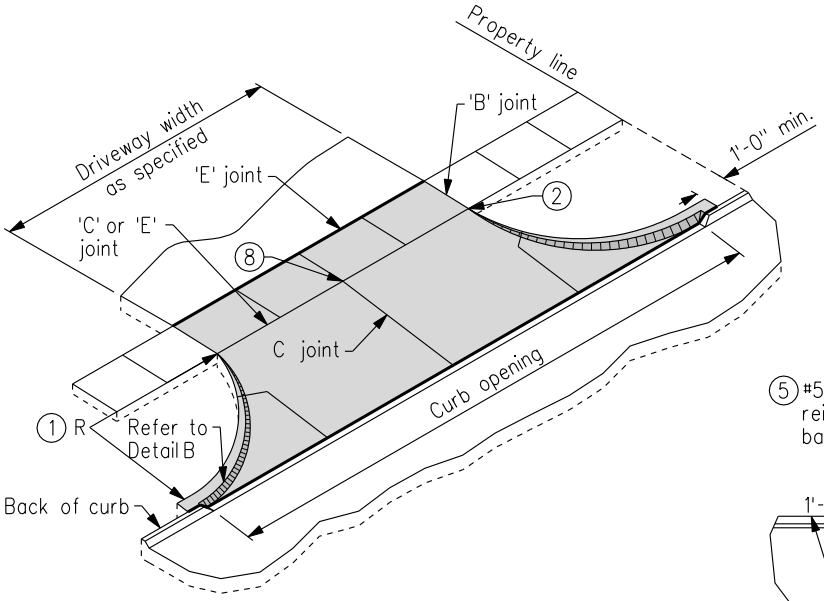

TYPE A WITH RADII

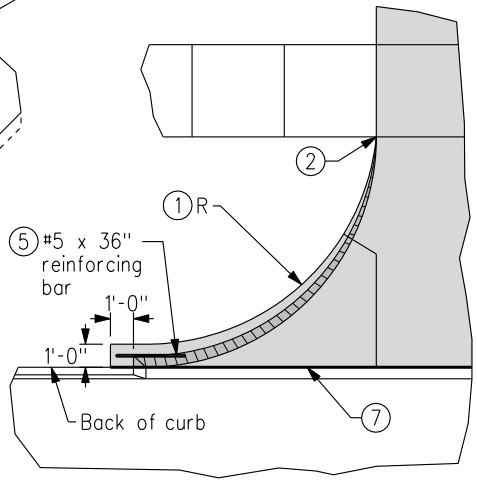

DETAIL B

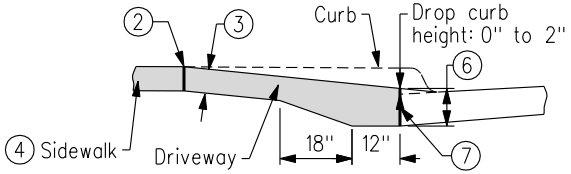

TYPICAL SECTION

	REVISION	
SUDAS	NEW	10/21/08
	FIGURE 7030.101	
	SHEET 1 OF 1	

CONCRETE DRIVEWAY, TYPE A

FIGURE 7030.101 SHEET 1 OF 1