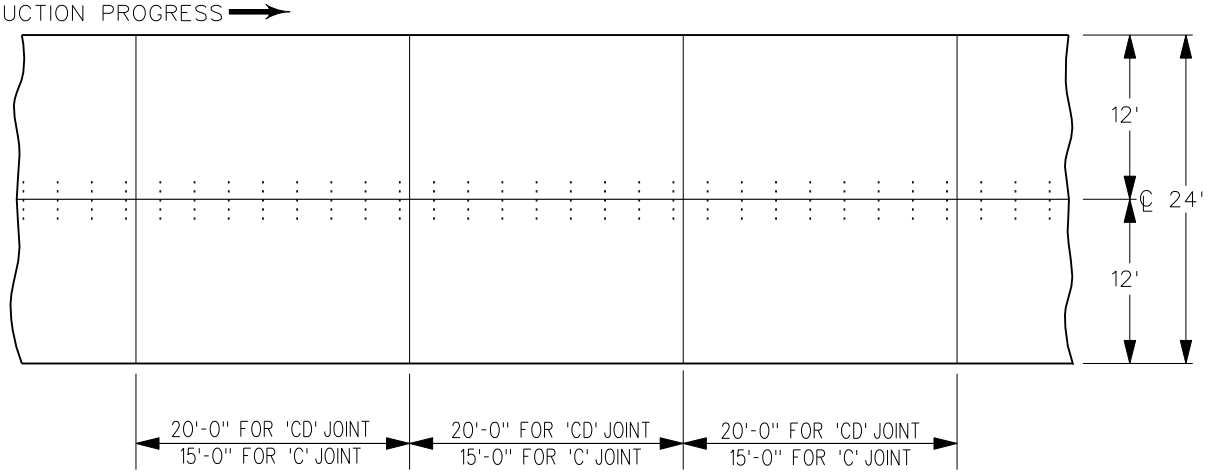

TYPICAL PAVEMENT PLAN

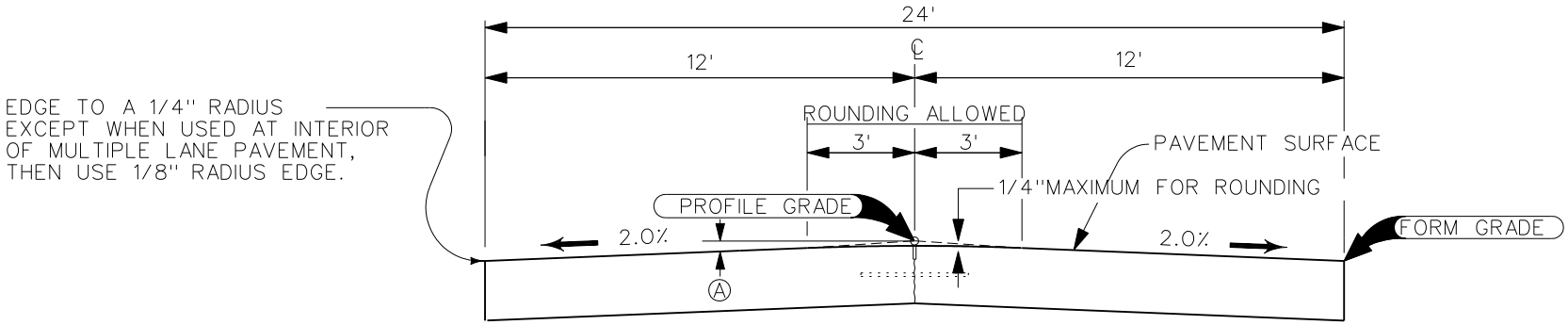

TYPICAL CROSS SECTION

NORMAL CROWN SHALL BE A STRAIGHT LINE SLOPED EACH WAY FROM CENTERLINE PROFILE GRADE FOR THE DISTANCE AND RATE INDICATED. ROUNDING TO A MAXIMUMOF 1/4" BELOW PROFILE GRADE WILL BE ALLOWED AS INDICATED. THIS CROWN MAY BE VARIED THROUGH SUPERELEVATED CURVES AND INTERSECTION AREAS WHERE SPECIAL SHAPING IS REQUIRED OR OTHER AREAS SPECIFICALLY AUTHORIZED BY THE ENGINEER. JOINTS WILL BE:

LONGITUDINAL:
'L-1' OR 'BT-1' FOR PAVEMENT THICKNESS LESS THAN 8", 'L-2 ' OR 'KT-2' FOR PAVEMENT THICKNESS GREATER THAN OR EQUAL TO 8"

TRANSVERSE:
JOINTS: SHALL BE 'C' JOINTS FOR PAVEMENT THICKNESS LESS THAN 8".
SHALL BE 'CD' JOINTS FOR PAVEMENT THICKNESS GREATER THAN OR EQUAL TO 8".
JOINT SPACING: 15' TRANSVERSE JOINT SPACING FOR PAVEMENT THICKNESS LESS THAN OR EQUAL TO 9".
20' TRANSVERSE JOINT SPACING FOR PAVEMENT THICKNESS GREATER THAN 9".
(NO DOWELS IN THE CURB AND GUTTER SECTION OF PAVEMENT).

OFFSETS FOR 24' RURAL PAVEMENT								
DISTANCE FROM CL		0.0'	2.0'	4.0'	6.0'	8.0'	10.0'	12.0'
Ⓐ	INCHES	0	1/2	15/16	1 7/16	1 15/16	2 3/8	2 7/8
	FEET	0.00	0.04	0.08	0.12	0.16	0.20	0.24

REV.	DATE	BY
3	10/2002	
2	01/25/01	
1	JAN. 1999	

DATE: 01-01-98

24' RURAL P.C. CONCRETE PAVEMENT
JOINTING & CROWN DETAIL

FIGURE: 7010.1D

SHEET 1 OF 1