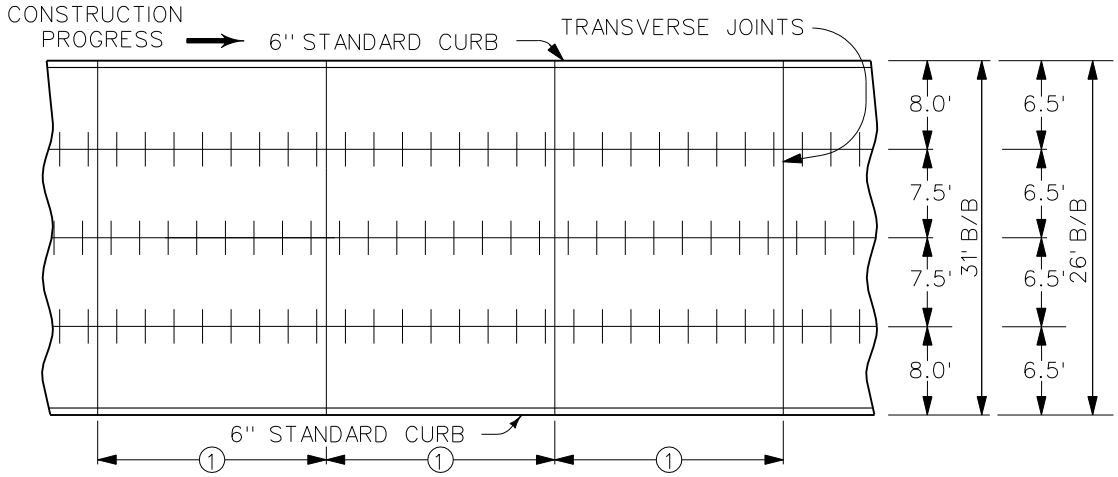

TYPICAL PAVEMENT PLAN

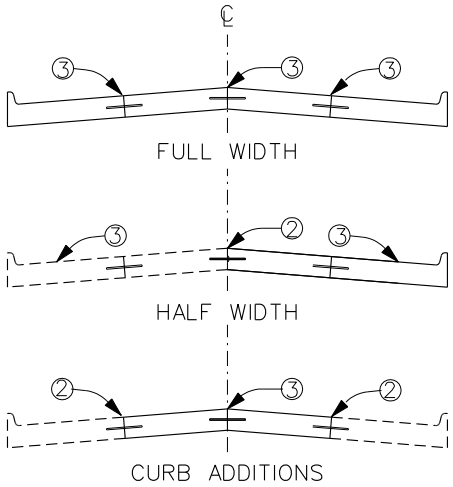

PAVING OPTIONS

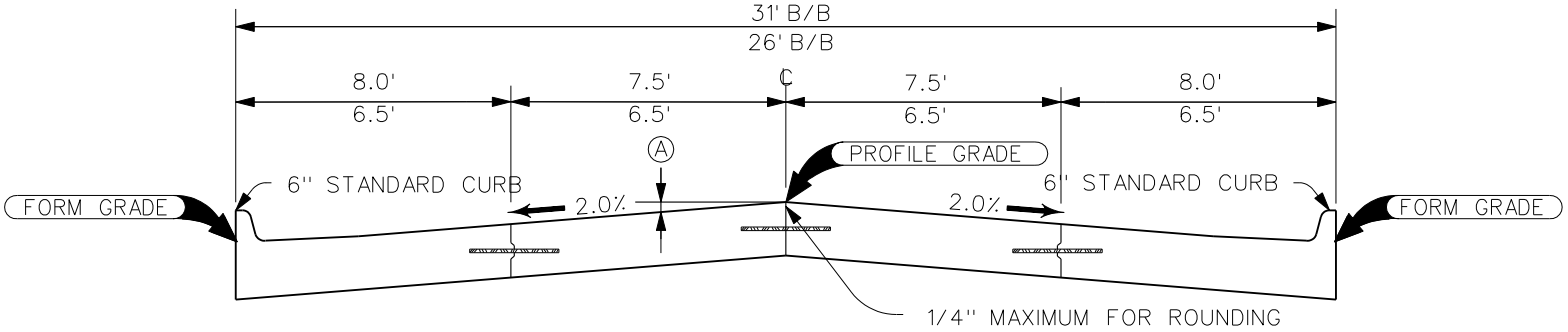

TYPICAL CROSS SECTION

QUARTER POINT JOINTING

GENERAL NOTES:

1 TRANSVERSE JOINTS: SHALL BE 'C' JOINTS FOR PAVEMENT THICKNESS LESS THAN 8".
SHALL BE 'CD' JOINTS FOR PAVEMENT THICKNESS GREATER THAN OR EQUAL TO 8".
(NO DOWELS WITHIN 24" OF THE BACK OF CURB).

JOINT SPACING: 15' TRANSVERSE JOINT SPACING FOR PAVEMENT THICKNESS LESS THAN OR EQUAL TO 9".
20' TRANSVERSE JOINT SPACING FOR PAVEMENT THICKNESS GREATER THAN 9".

2 'BT-1', 'BT-5', OR 'KT-1' JOINT IF PAVEMENT THICKNESS IS LESS THAN 8"; 'KT-2' JOINT IF PAVEMENT THICKNESS IS 8" OR GREATER.

3 'L-1' JOINT IF PAVEMENT THICKNESS IS LESS THAN 8"; 'L-2' JOINT IF PAVEMENT THICKNESS IS 8" OR GREATER.

OFFSETS FOR 26' AND 31' PAVEMENT											
DISTANCE FROM CL		0.0'	2.0'	4.0'	6.0'	8.0'	10.0'	12.0'	13.0'	14.0'	15.5'
A	INCHES	0	1/2	15/16	1 7/16	1 15/16	2 3/8	2 7/8	3 1/8	3 3/8	3 3/4
	FEET	0.00	0.04	0.08	0.12	0.16	0.20	0.24	0.26	0.28	0.31

REV.	DATE	BY
1	10/18/05	

DATE: 10-19-2004

26' B/B & 31' B/B PCC PAVEMENT
1/4 POINT JOINTING AND CROWN DETAIL

FIGURE: 7010.1A

SHEET 1 OF 2

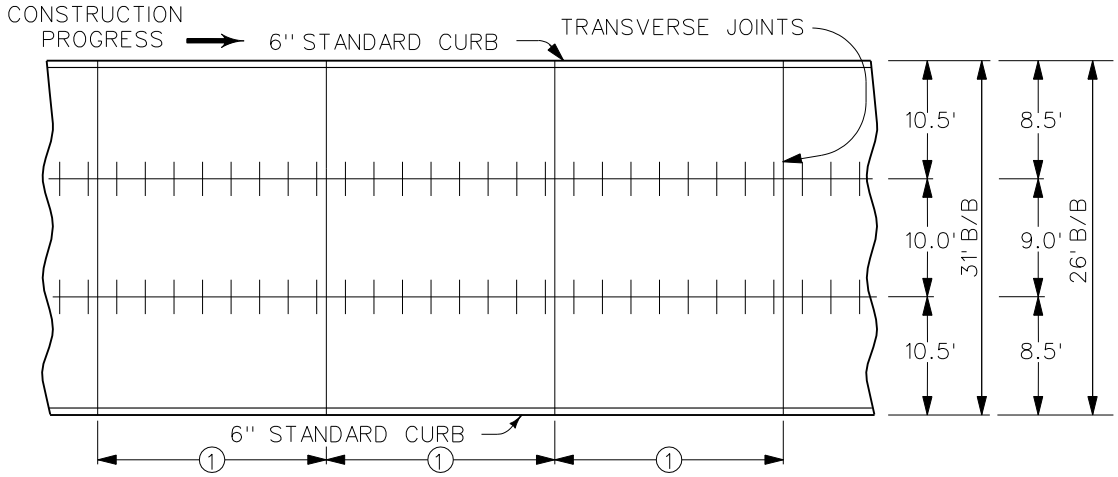

TYPICAL PAVEMENT PLAN

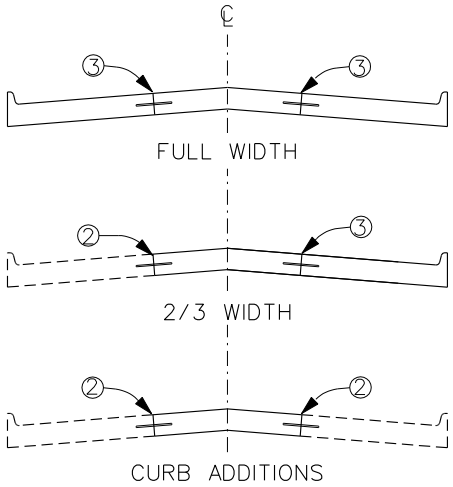

PAVING OPTIONS

THIRD POINT JOINTING

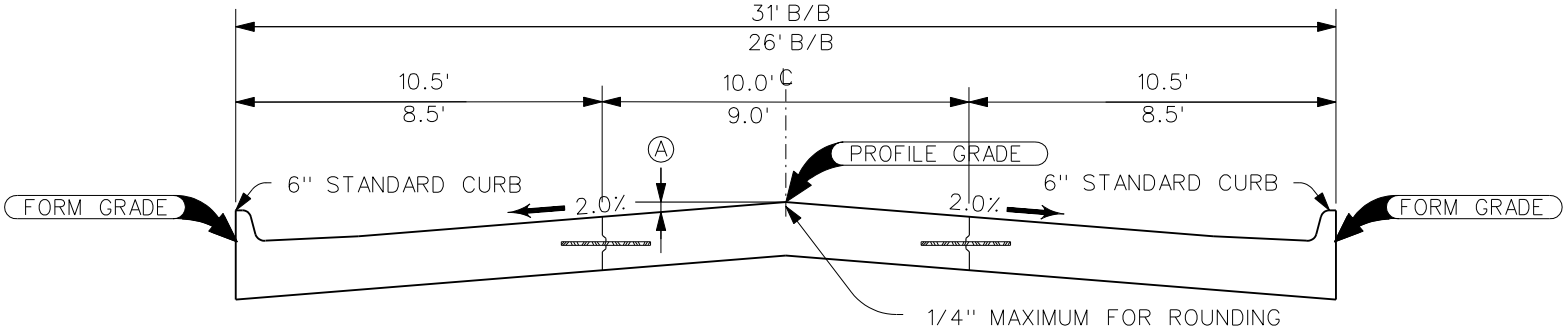

TYPICAL CROSS SECTION

GENERAL NOTES:

1 TRANSVERSE JOINTS: SHALL BE 'C' JOINTS FOR PAVEMENT THICKNESS LESS THAN 8".
SHALL BE 'CD' JOINTS FOR PAVEMENT THICKNESS GREATER THAN OR EQUAL TO 8".
(NO DOWELS WITHIN 24" OF THE BACK OF CURB).

JOINT SPACING: 15' TRANSVERSE JOINT SPACING FOR PAVEMENT THICKNESS LESS THAN OR EQUAL TO 9".
20' TRANSVERSE JOINT SPACING FOR PAVEMENT THICKNESS GREATER THAN 9".

2 'BT-1', 'BT-5', OR 'KT-1' JOINT IF PAVEMENT THICKNESS IS LESS THAN 8"; 'KT-2' JOINT IF PAVEMENT THICKNESS IS 8" OR GREATER.

3 'L-1' JOINT IF PAVEMENT THICKNESS IS LESS THAN 8"; 'L-2' JOINT IF PAVEMENT THICKNESS IS 8" OR GREATER.

OFFSETS FOR 26' AND 31' PAVEMENT											
DISTANCE FROM CL		0.0'	2.0'	4.0'	6.0'	8.0'	10.0'	12.0'	13.0'	14.0'	15.5'
A	INCHES	0	1/2	15/16	1 7/16	1 15/16	2 3/8	2 7/8	3 1/8	3 3/8	3 3/4
	FEET	0.00	0.04	0.08	0.12	0.16	0.20	0.24	0.26	0.28	0.31

REV.	DATE	BY
1	10/18/05	

DATE: 10-19-2004

26' B/B & 31' B/B PCC PAVEMENT
1/3 POINT JOINTING AND CROWN DETAIL

FIGURE: 7010.1A