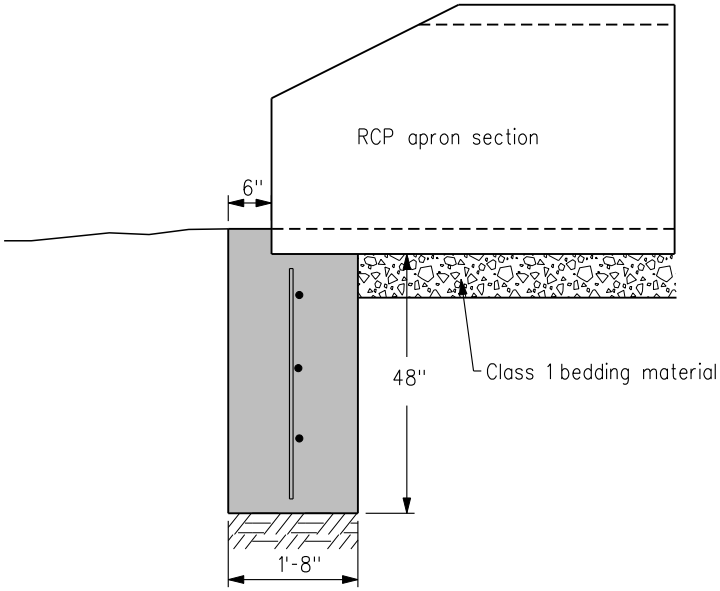

TYPICAL SECTION

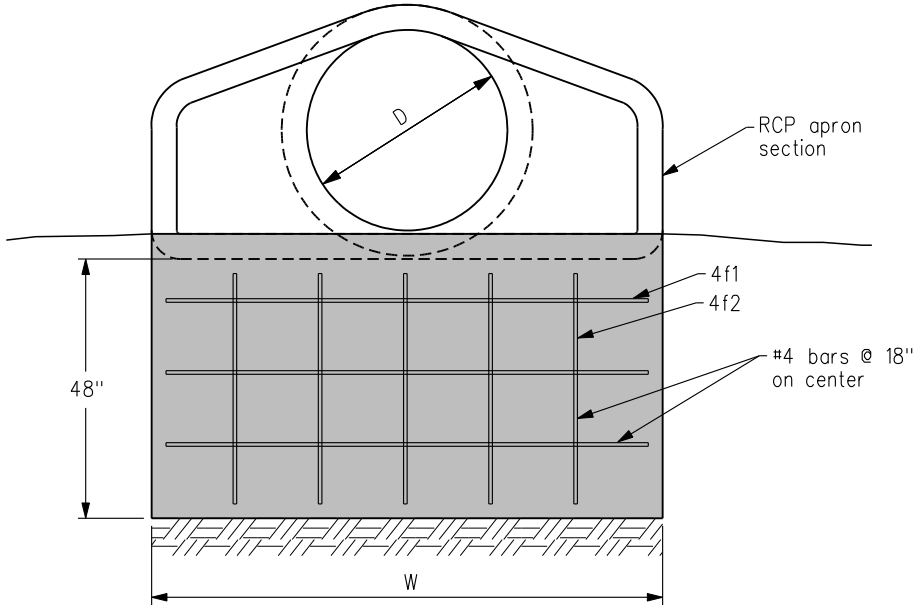

ELEVATION

REINFORCING BAR LIST

D	W	Mark	Size	Length	Count
12"	2'-4"	4f1	4	2'-0"	3
		4f2	4	3'-8"	2
15"	2'-10½"	4f1	4	2'-6 ½"	3
		4f2	4	3'-8"	2
18"	3'-5"	4f1	4	3'-1"	3
		4f2	4	3'-8"	3
24"	4'-6"	4f1	4	4'-2"	3
		4f2	4	3'-8"	3
30"	5'-7"	4f1	4	5'-3"	3
		4f2	4	3'-8"	4
36"	6'-8"	4f1	4	6'-4"	3
		4f2	4	3'-8"	5
42"	7'-3"	4f1	4	6'-11"	3
		4f2	4	3'-8"	5

D	W	Mark	Size	Length	Count
48"	7'-10"	4f1	4	7'-6"	3
		4f2	4	3'-8"	6
54"	8'-5"	4f1	4	8'-1"	3
		4f2	4	3'-8"	6
60"	8'-11"	4f1	4	8'-7"	3
		4f2	4	3'-8"	6
66"	8'-11"	4f1	4	8'-7"	3
		4f2	4	3'-8"	6
72"	10'-0"	4f1	4	9'-8"	3
		4f2	4	3'-8"	7
78"	10'-7"	4f1	4	10'-3"	3
		4f2	4	3'-8"	7
84"	11'-1"	4f1	4	10'-9"	3
		4f2	4	3'-8"	8

SUDAS

REVISION	
NEW	10/21/08

FIGURE 4030.221

SHEET 1 OF 1

RCP APRON SECTION FOOTING

FIGURE 4030.221 SHEET 1 OF 1