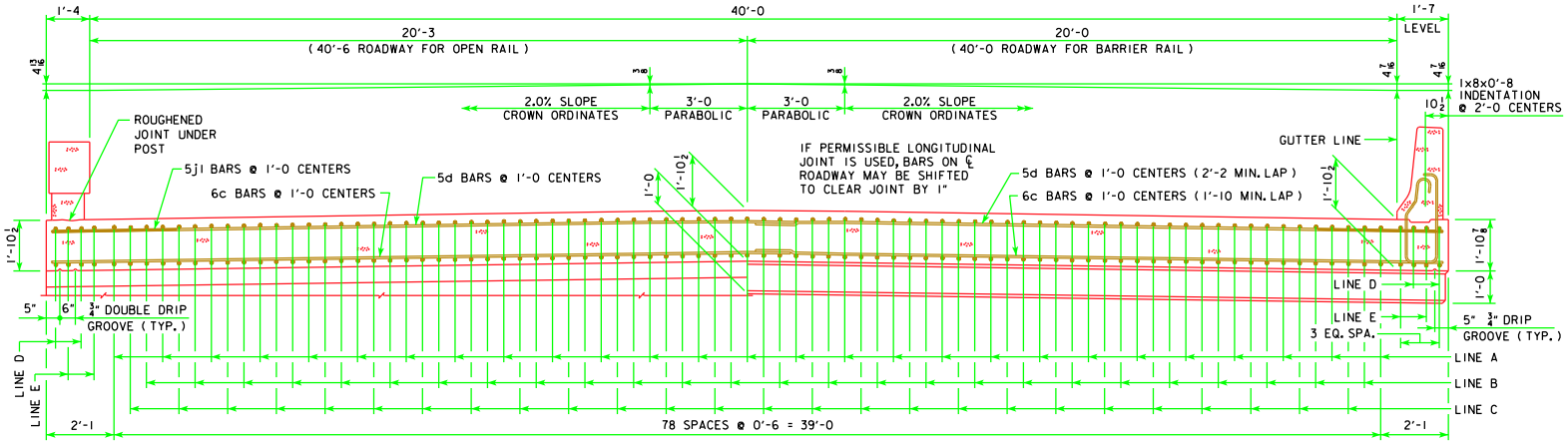

HALF SECTION NEAR ABUTMENT

SLAB CROSS-SECTIONAL AREA
FOR OPEN RAIL = 80.94 SQ. FT.

NOTE: TOP LONGITUDINAL REINFORCING STEEL IS TO BE PARALLEL TO AND 2½" CLEAR BELOW TOP OF SLAB. BOTTOM LONGITUDINAL REINFORCING STEEL IS TO BE PARALLEL TO AND 1½" CLEAR ABOVE BOTTOM OF SLAB. REINFORCING STEEL IS TO BE SECURELY WIRED IN PLACE AND ADEQUATELY SUPPORTED ON EPOXY COATED BAR CHAIRS BEFORE CONCRETE IS POURED.

HALF SECTION NEAR PIER

SLAB CROSS-SECTIONAL AREA
FOR BARRIER RAIL = 80.99 SQ. FT.

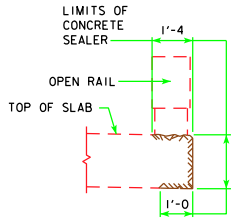

CONCRETE SEALER LIMITS
FOR OPEN RAILS

CONCRETE SEALER SHALL BE APPLIED TO BOTH SIDES OF BRIDGE SLAB ON THE TOP, EDGE OF SLAB AND UNDER SLAB FOR FULL LENGTH OF BRIDGE TO LIMITS SHOWN IN DETAIL. SEALER SHALL BE APPLIED IN ACCORDANCE WITH STANDARD SPECIFICATION 2403.21D.

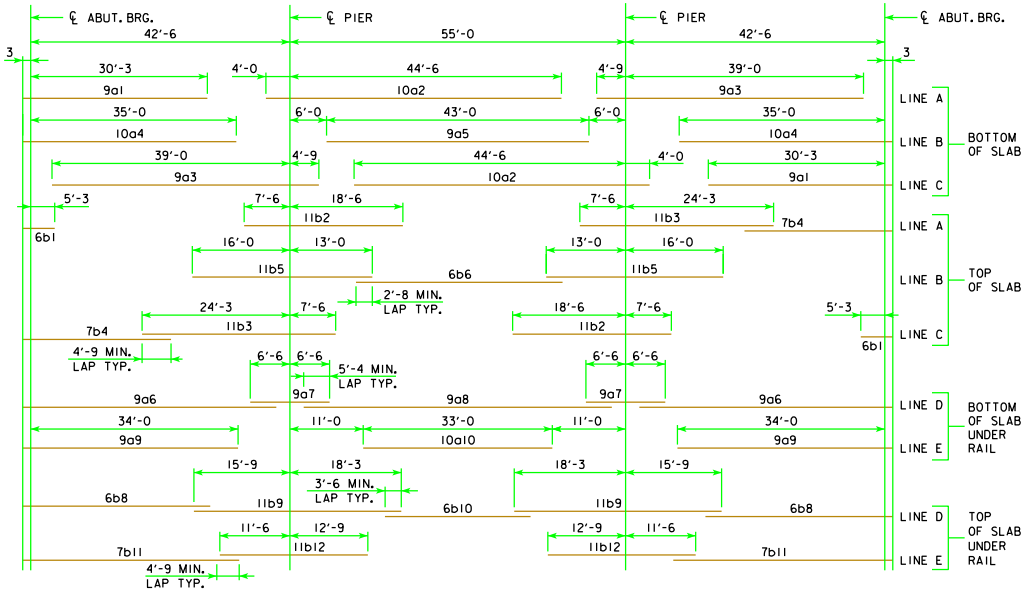

PLACEMENT FOR LONGITUDINAL REINFORCEMENT

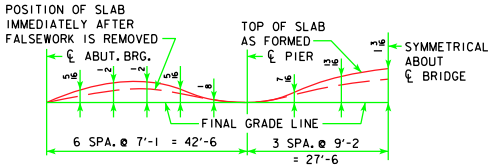

FORM CAMBER DIAGRAM

THIS DIAGRAM SHOWS THE FORM CAMBER REQUIRED TO COMPENSATE FOR THE ANTICIPATED ULTIMATE DEAD LOAD DEFLECTION. THE ABOVE DIMENSIONS DO NOT INCLUDE ANY ALLOWANCE FOR FORM DEFLECTION OR FALSEWORK SETTLEMENT.

11-08
LATEST REVISION DATE

APPROVED BY BRIDGE ENGINEER

Iowa Department of Transportation
Highway Division

STANDARD DESIGN - 40' ROADWAY, 3 SPAN BRIDGES

CONTINUOUS CONCRETE
SLAB BRIDGES

NOVEMBER, 2006

SUPERSTRUCTURE DETAILS
140'-0 BRIDGE

J40-16-06

REVISED 11-08 - CHANGED DISTANCE OF END OF REBAR TO ℄ OF ABUTMENT BEARING FROM 1'-4 TO 3 INCHES. REMOVED PERMISSIBLE LONGITUDINAL CONSTRUCTION JOINT.