BILL OF REINFORCING STEEL FOR SUPERSTRUCTURE - 120' BRIDGE

LOCATION \ SKEW	SHAPE	BAR	0° NO.	0° LENGTH	0° WEIGHT	15° NO.	15° LENGTH	15° WEIGHT	30° NO.	30° LENGTH	30° WEIGHT	45° NO.	45° LENGTH	45° WEIGHT
SLAB LONGITUDINAL BOTTOM		9a1	53	27'-0	4866	53	27'-0	4866	53	27'-0	4866	53	27'-0	4866
SLAB LONGITUDINAL BOTTOM		9a2	53	41'-3	7434	53	41'-3	7434	53	41'-3	7434	53	41'-3	7434
SLAB LONGITUDINAL BOTTOM		9a3	53	38'-9	6983	53	38'-9	6983	53	38'-9	6983	53	38'-9	6983
SLAB LONGITUDINAL BOTTOM		8a4	52	29'-3	4062	52	29'-3	4062	52	29'-3	4062	52	29'-3	4062
SLAB LONGITUDINAL BOTTOM		9a5	26	36'-6	3227	26	36'-6	3227	26	36'-6	3227	26	36'-6	3227
SLAB LONGITUDINAL BOTTOM, AT RAIL		9a6	8	36'-1	982	8	36'-1	982	8	36'-1	982	8	36'-1	982
SLAB LONGITUDINAL BOTTOM, AT RAIL		9a7	8	12'-0	327	8	12'-0	327	8	12'-0	327	8	12'-0	327
SLAB LONGITUDINAL BOTTOM, AT RAIL		9a8	4	45'-8	622	4	45'-8	622	4	45'-8	622	4	45'-8	622
SLAB LONGITUDINAL BOTTOM, AT RAIL		8a9	8	25'-6	545	8	25'-6	545	8	25'-6	545	8	25'-6	545
SLAB LONGITUDINAL BOTTOM, AT RAIL		8a10	4	25'-6	273	4	25'-6	273	4	25'-6	273	4	25'-6	273
SLAB LONGITUDINAL TOP		7b1	53	9'-0	975	53	9'-0	975	53	9'-0	975	53	9'-0	975
SLAB LONGITUDINAL TOP		10b2	53	29'-6	6728	53	29'-6	6728	53	29'-6	6728	53	29'-6	6728
SLAB LONGITUDINAL TOP		10b3	53	26'-9	6101	53	26'-9	6101	53	26'-9	6101	53	26'-9	6101
SLAB LONGITUDINAL TOP		7b4	53	23'-3	2519	53	23'-3	2519	53	23'-3	2519	53	23'-3	2519
SLAB LONGITUDINAL TOP		11b5	52	30'-3	8358	52	30'-3	8358	52	30'-3	8358	52	30'-3	8358
SLAB LONGITUDINAL TOP		6b6	26	28'-4	1107	26	28'-4	1107	26	28'-4	1107	26	28'-4	1107
SLAB LONGITUDINAL TOP, AT RAIL		6b8	8	29'-0	349	8	29'-0	349	8	29'-0	349	8	29'-0	349
SLAB LONGITUDINAL TOP, AT RAIL		10b9	8	29'-0	999	8	29'-0	999	8	29'-0	999	8	29'-0	999
SLAB LONGITUDINAL TOP, AT RAIL		6b10	4	23'-0	139	4	23'-0	139	4	23'-0	139	4	23'-0	139
SLAB LONGITUDINAL TOP, AT RAIL		6b11	8	31'-6	379	8	31'-6	379	8	31'-6	379	8	31'-6	379
SLAB LONGITUDINAL TOP, AT RAIL		11b12	8	23'-0	978	8	23'-0	978	8	23'-0	978	8	23'-0	978
SLAB TRANSVERSE BOTTOM		6c1	117	23'-5	4116	117	24'-3	4262	108	23'-5	3799	98	23'-5	3447
SLAB TRANSVERSE BOTTOM		6c2	117	21'-3	3735	117	22'-0	3867	109	21'-3	3480	101	21'-3	3224
SLAB TRANSVERSE ENDS, BOTTOM		6c3	-	-	-	-	-	-	12	VARIES	223	20	VARIES	411
SLAB TRANSVERSE ENDS, BOTTOM		6c4	-	-	-	-	-	-	11	VARIES	219	20	VARIES	386
SLAB TRANSVERSE ENDS, BOTTOM		6c5	-	-	-	-	-	-	11	VARIES	176	18	VARIES	302
SLAB TRANSVERSE ENDS, BOTTOM		6c6	-	-	-	-	-	-	11	VARIES	190	17	VARIES	311
SLAB TRANSVERSE TOP		5d1	117	23'-9	2899	117	24'-7	3000	108	23'-9	2676	98	23'-9	2428
SLAB TRANSVERSE TOP		5d2	117	21'-3	2594	117	22'-0	2685	109	21'-3	2416	101	21'-3	2239
SLAB TRANSVERSE ENDS, TOP		5d3	-	-	-	-	-	-	12	VARIES	155	20	VARIES	286
SLAB TRANSVERSE ENDS, TOP		5d4	-	-	-	-	-	-	11	VARIES	152	20	VARIES	268
SLAB TRANSVERSE ENDS, TOP		5d5	-	-	-	-	-	-	11	VARIES	122	18	VARIES	210
SLAB TRANSVERSE ENDS, TOP		5d6	-	-	-	-	-	-	11	VARIES	132	17	VARIES	216
SLAB, TRANSVERSE AT ABUTMENT		8e1	18	26'-4	1266	18	27'-1	1302	18	29'-6	1418	18	34'-8	1667
SLAB, TRANSVERSE AT ABUTMENT		8e2	18	21'-4	1026	18	22'-0	1058	18	24'-5	1174	18	29'-7	1422
SLAB, HAIRPINS, AT ABUTMENT		6e3	92	5'-0	691	92	5'-1	703	92	5'-5	749	92	6'-1	841
SLAB, DIAGONALS, AT ABUTMENT		6e4	92	5'-11	818	92	5'-11	818	92	5'-11	818	92	5'-11	818
PIER CAP HOOPS		5h1	52	7'-10	425	52	7'-10	425	78	7'-10	638	104	7'-10	850
PIER CAP ENDS		8h2	4	14'-5	154	4	14'-5	154	4	14'-5	154	4	14'-5	154
PIER CAP, BOTTOM LONGITUDINAL		8h3	8	25'-5	543	8	26'-7	568	8	29'-4	627	8	35'-0	748
PIER CAP, BOTTOM LONGITUDINAL		8h4	8	19'-11	426	8	20'-3	433	8	22'-2	474	8	26'-10	574
PIER CAP, TOP LONGITUDINAL		8h5	4	26'-2	280	4	27'-5	293	4	30'-4	324	4	36'-1	386
PIER CAP, TOP LONGITUDINAL		8h6	4	21'-5	229	4	21'-10	234	4	23'-11	256	4	28'-8	307
TOP OF SLAB, TRANSVERSE, AT RAIL		5j1	232	8'-6	2057	232	8'-6	2057	222	8'-6	1969	216	8'-6	1915
WING, VERTICAL		5m1	40	4'-5	185	40	4'-5	185	40	4'-5	185	40	4'-5	185
WING, HORIZONTAL BACK FACE		5n1	24	6'-8	167	24	6'-8	167	24	6'-8	167	24	6'-8	167
WING, HORIZONTAL TRAFFIC FACE		5n3	24	6'-9	169	24	6'-9	169	24	6'-9	169	24	6'-9	169
SUB TOTAL - LBS.					79,733			80,333			80,815			81,884
BARRIER RAIL - SEE LIST ON RAIL SHEET J40-46-06					7456			7456			7456			7456
OPEN RAIL - SEE LIST ON RAIL SHEET J40-49-06					8142			8142			8142			8142
TOTAL - LBS.	WITH MONOLITHIC PIER CAP	WITH BARRIER RAIL			87,189			87,789			88,271			89,340
		WITH OPEN RAIL			87,875			88,475			88,957			90,026
TOTAL - LBS.	WITH NON-MONOLITHIC PIER CAP	WITH BARRIER RAIL			85,132			85,682			85,798			86,321
SAME AS ABOVE EXCEPT ALL "h" BARS DELETED		WITH OPEN RAIL			85,818			86,368			86,484			87,007

ESTIMATED QUANTITIES FOR SUPERSTRUCTURE - 120' BRIDGE

ITEM		SKEW	WITH MONOLITHIC PIER CAP 0°	15°	30°	45°	WITH NON-MONOLITHIC PIER CAP 0°	15°	30°	45°
WITH BARRIER RAIL	*STRUCTURAL CONCRETE (BRIDGE)	C.Y.	350.5	351.5	354.7	361.8	344.5	345.2	347.8	353.4
	REINFORCING STEEL EPOXY COATED	LBS.	87,189	87,789	88,271	89,340	85,132	85,682	85,798	86,321
	CONCRETE BARRIER OR OPEN RAIL	LIN. FT.	262.0	262.2	262.9	264.5	262.0	262.2	262.9	264.5
WITH OPEN RAIL	*STRUCTURAL CONCRETE (BRIDGE)	C.Y.	350.3	351.2	354.5	361.6	344.3	345.0	347.6	353.2
	REINFORCING STEEL EPOXY COATED	LBS.	87,875	88,475	88,957	90,026	85,818	86,368	86,484	87,007

* INCLUDES 4 WINGS @ 0.68 C.Y. EACH; EXCLUDES RAIL CONCRETE.

BENT BAR DETAILS

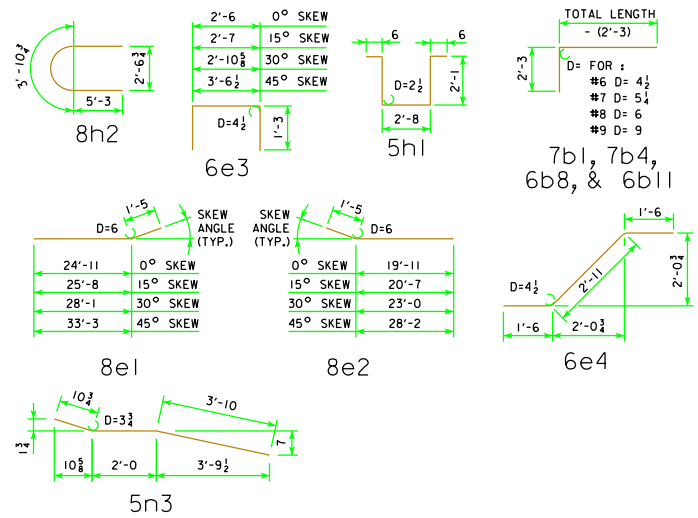

NOTE: ALL DIMENSIONS ARE OUT TO OUT. D = PIN DIAMETER.

NOTES:

ALL REINFORCING STEEL SHALL BE EPOXY COATED.

THE TRANSVERSE REBARS ARE DETAILED WITH A SPLICE LAP. AT THE CONTRACTOR'S OPTION, THIS LAP MAY BE ELIMINATED BY FURNISHING FULL LENGTH BARS WITH NO REDUCTION IN PAY WEIGHT FOR SAME.

CORRECTION 12-08 - CHANGED THE PIN DIAMETER BEND ON THE 5n3 BAR.
REVISED 11-08 - REVISED SHEET FOR NEW PAVING NOTCH DETAIL.

12-08
LATEST REVISION DATE

APPROVED BY BRIDGE ENGINEER

Iowa Department of Transportation
Highway Division

STANDARD DESIGN - 40' ROADWAY, 3 SPAN BRIDGES

CONTINUOUS CONCRETE SLAB BRIDGES

NOVEMBER, 2006

SUPERSTRUCTURE DETAILS
120'-0 BRIDGE

J40-13-06