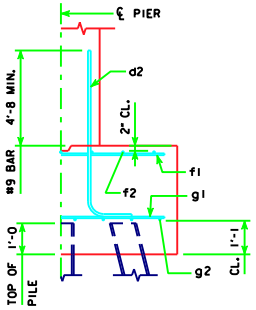

TYPICAL SECTION

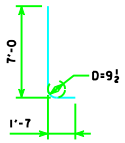

d2

NOTE: D = PIN DIAMETER.
DIMENSIONS ARE OUT TO OUT.

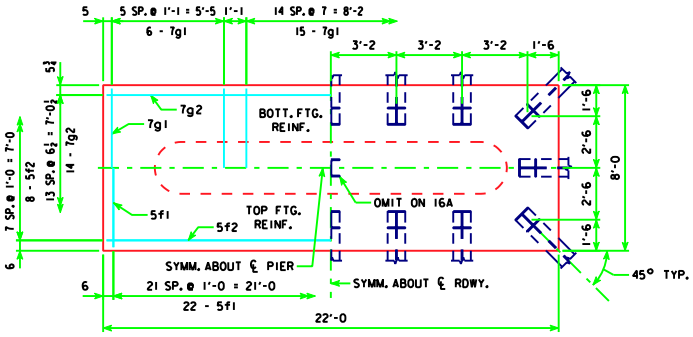

3'-6 x 8'-0 x 22'-0 FOR 16A & 17A

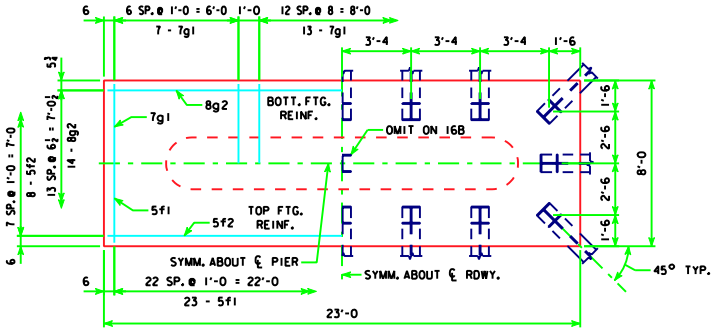

3'-6 x 8'-0 x 23'-0 FOR 16B & 17B

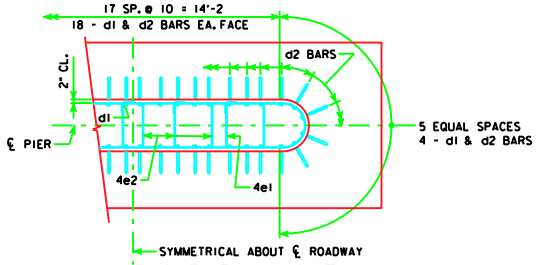

d2 BAR LAYOUT
(SEE SECTION A-A ON SHEET H40-53-06.)

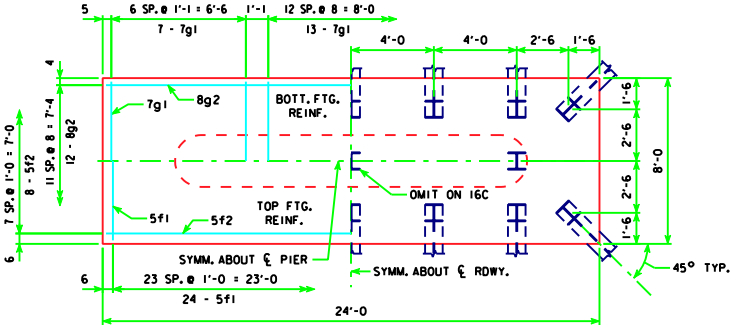

3'-6 x 8'-0 x 24'-0 FOR 16C & 17C

H IN FT.	℄ - ℄ ABUT. BRG.	PILING NO. & LAYOUT	PILING DES. BRG. (TONS)	FOOTING SIZE
16 TO 18	201'-4	16A	47	3'-6 x 8' x 22'
	213'-10	16A	49	
	226'-4	16A	50	
	243'-0	17A	50	
19 TO 21	201'-4	16B	47	3'-6 x 8' x 23'
	213'-10	16B	49	
	226'-4	17B	49	
	243'-0	17B	50	
22 TO 24	201'-4	16C	47	3'-6 x 8' x 24'
	213'-10	16C	49	
	226'-4	17C	49	
	243'-0	17C	50	

FOOTING SIZE	REINFORCING STEEL (ONE FOOTING) BAR	NO., SIZE & SPACING	LENGTH	WEIGHT (LB.)	TOTAL WEIGHT (LB.)	STRUCTURAL CONCRETE (CY)
3'-6 x 8' x 22'	d2	44 - #9 AS SHOWN	8'-7	1284	2684	22.8
	f1	22 - #5 @ 1'-0	7'-8	176		
	f2	8 - #5 @ 1'-0	21'-8	181		
	g1	27 - #7 AS SHOWN	7'-8	423		
	g2	14 - #7 @ 0'-6½	21'-8	620		
3'-6 x 8' x 23'	d2	44 - #9 AS SHOWN	8'-7	1284	2927	23.9
	f1	23 - #5 @ 1'-0	7'-8	184		
	f2	8 - #5 @ 1'-0	22'-8	189		
	g1	27 - #7 AS SHOWN	7'-8	423		
	g2	14 - #8 @ 0'-6½	22'-8	847		
3'-6 x 8' x 24'	d2	44 - #9 AS SHOWN	8'-7	1284	2854	24.9
	f1	24 - #5 @ 1'-0	7'-8	192		
	f2	8 - #5 @ 1'-0	23'-8	197		
	g1	27 - #7 AS SHOWN	7'-8	423		
	g2	12 - #8 @ 0'-8	23'-8	758		

FOOTING NOTES:

THESE FOOTINGS ARE DESIGNED AND DETAILED TO BE USED WITH THE CAP AND COLUMN DETAILS OF THE TEE PIERS AS SHOWN ON SHEET H40-53-06.

BATTER PILES IN EXTERIOR ROWS 1:4 IN THE DIRECTION SHOWN.

PIER PILES (HP10x57) ARE TO BE DRIVEN TO THE DESIGN BEARING VALUE.

STEEL PILING USED AS POINT BEARING SHALL HAVE A MINIMUM DISTANCE OF APPROXIMATELY 10 FEET FROM BOTTOM OF FOOTING TO TOP OF BEARING ROCK. THE PILE LAYOUTS ARE SUCH THAT THE DISTANCE CENTER TO CENTER OF ADJACENT PILING SHALL NOT EXCEED 8'-0.

LATEST REVISION DATE

APPROVED BY BRIDGE ENGINEER

Iowa Department of Transportation
Highway Division

STANDARD DESIGN - 40' ROADWAY, THREE SPAN BRIDGE
PRETENSIONED PRESTRESSED CONCRETE BEAM BRIDGES
HL93 SUPERSTRUCTURE DECEMBER, 2006 HS25 SUBSTRUCTURE

TEE PIER - STEEL PILE FOOTINGS, H=16' TO 24'
0° SKEW

H40-55-06