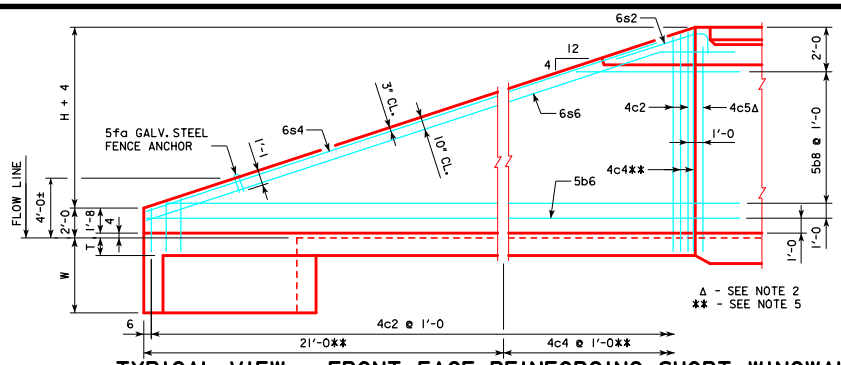

TYPICAL VIEW - FRONT FACE REINFORCING SHORT WINGWALL

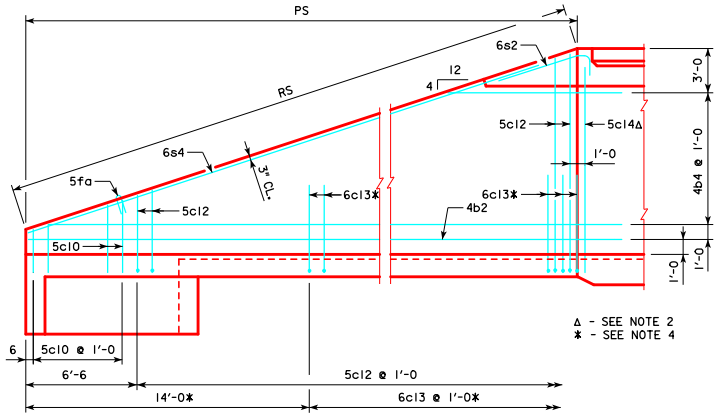

TYPICAL VIEW - BACK FACE REINFORCING SHORT WINGWALL

CULVERT HEIGHT (H)	SLOPE y INCHES
4'	$4\frac{1}{8}$
5'	$4\frac{7}{16}$
6'	$4\frac{5}{8}$
7'	$4\frac{15}{16}$
8'	$4\frac{13}{16}$
9'	5
10'	$5\frac{1}{8}$
11'	$5\frac{3}{16}$
12'	$5\frac{1}{4}$

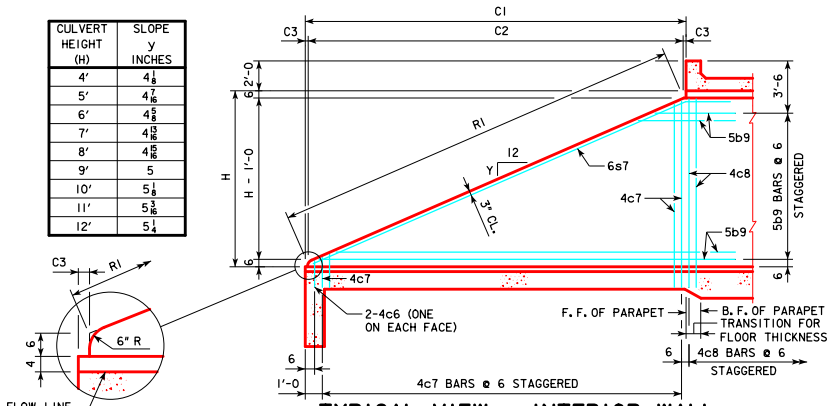

TYPICAL VIEW - INTERIOR WALL

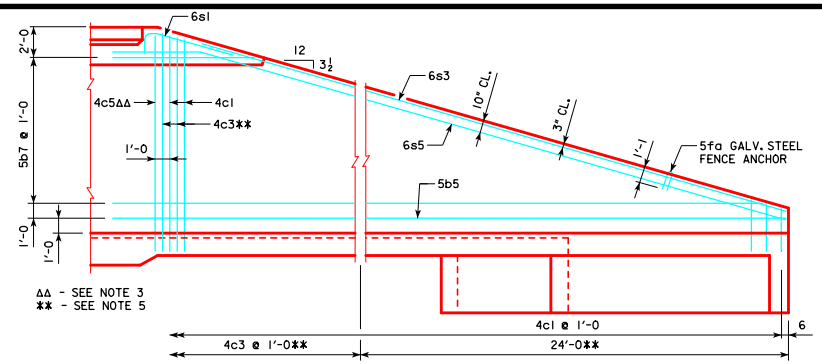

TYPICAL VIEW - FRONT FACE REINFORCING LONG WINGWALL

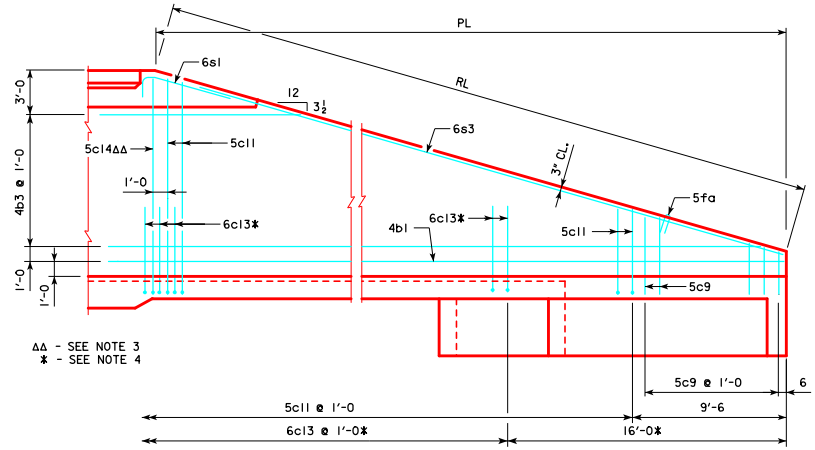

TYPICAL VIEW - BACK FACE REINFORCING LONG WINGWALL

NOTES:

1. BAR SPACINGS AND POSITIONS SHOWN ARE SIMILAR FOR ALL SIZES OF HEADWALLS IN THIS STANDARD.
2. TWO 4c5 & TWO 5c14 BARS FOR ALL HEADWALLS.
3. TWO 4c5 & TWO 5c14 BARS FOR 4', 5', 7', 9', 10' & 12' HEIGHT HEADWALLS. ONE 4c5 & ONE 5c14 BAR FOR 6', 8' & 11' HEIGHT HEADWALLS.
4. NOT APPLICABLE FOR 4' & 5' HEADWALLS.
5. NOT APPLICABLE FOR 4' THRU 8' HEIGHT HEADWALLS.
6. FOR DIMENSION TABLE SEE SHEET TRH 15-2-12.

07-2016
LATEST REVISION DATE

APPROVED BY BRIDGE ENGINEER

Iowa Department of Transportation
Highway Division

STANDARD DESIGN

TRIPLE REINFORCED CONCRETE BOX CULVERTS

APRIL, 2012

FLARED WING HEADWALLS

15° SKEW

TRH 15-6-12

REVISED 05-13 - CHANGED BAR MARK 6c3 TO 6c13 IN TYPICAL VIEW - BACK FACE REINFORCING LONG WINGWALL DETAIL.
REVISED 07-2016 - REMOVED 1'-8 VERTICAL DIMENSION FROM 6s5 & 6s6 BARS TO TOP OF PARAPET. THIS ALLOWS FOR THE VARIABLE VERTICAL LOCATION OF THE HORIZONTAL LEG IN THE SLAB.
THIS VARIANCE IN LOCATION IS CAUSED BY THE DIFFERING WING SIZES OF DIFFERENT SIZED R.C.B. CULVERTS.
ENGLISH REDESIGNED TRIPLECULVERTS.DGN - TRH 15-6-12 - THIS SHEET ISSUED 04-12.