# BILL OF REINFORCING FOR ONE HEADWALL 0° SKEW CULVERT SPAN x CULVERT HEIGHT

| BAR | LOCATION | SHAPE | 12' x 12' NO. | 12' x 12' LENGTH | 12' x 12' WT. | 12' x 11' NO. | 12' x 11' LENGTH | 12' x 11' WT. | 12' x 10' NO. | 12' x 10' LENGTH | 12' x 10' WT. | 12' x 9' NO. | 12' x 9' LENGTH | 12' x 9' WT. | 12' x 8' NO. | 12' x 8' LENGTH | 12' x 8' WT. |
|---|---|---|---|---|---|---|---|---|---|---|---|---|---|---|---|---|---|
| 5fa | FENCE ANCHOR (GALV.) | | 2 | 2'-10 | 6 | 2 | 2'-10 | 6 | 2 | 2'-10 | 6 | 2 | 2'-10 | 6 | 2 | 2'-10 | 6 |
| 4b1 | WINGWALL, B.F.H. | | 2 | 40'-10 | 58 | 2 | 37'-9 | 50 | 2 | 34'-8 | 46 | 2 | 31'-7 | 42 | 2 | 28'-6 | 38 |
| 4b2 | WINGWALL, B.F.H. | | 20 VAR. | 2 EACH 11'-7 TO 39'-5 | 341 | 18 VAR. | 2 EACH 11'-7 TO 36'-4 | 288 | 16 VAR. | 2 EACH 11'-7 TO 33'-3 | 240 | 14 VAR. | 2 EACH 11'-7 TO 30'-2 | 195 | 12 VAR. | 2 EACH 11'-7 TO 27'-1 | 155 |
| 5b3 | WINGWALL, F.F.H. | | 2 | 40'-11 | 90 | 2 | 37'-10 | 79 | 2 | 34'-9 | 72 | 2 | 31'-8 | 66 | 2 | 28'-7 | 60 |
| 5b4 | WINGWALL, F.F.H. | | 22 VAR. | 2 EACH 8'-6 TO 39'-6 | 551 | 20 VAR. | 2 EACH 8'-6 TO 36'-5 | 468 | 18 VAR. | 2 EACH 8'-7 TO 33'-4 | 393 | 16 VAR. | 2 EACH 8'-7 TO 30'-3 | 324 | 14 VAR. | 2 EACH 8'-7 TO 27'-2 | 261 |
| 5b5 | INTERIOR WALLS, BOTH F.H. | | 42 VAR. | 2 EACH 4'-10 TO 27'-4 | 705 | 38 VAR. | 2 EACH 4'-11 TO 25'-4 | 599 | 34 VAR. | 2 EACH 4'-11 TO 23'-3 | 499 | 30 VAR. | 2 EACH 4'-11 TO 21'-3 | 409 | 26 VAR. | 2 EACH 5'-0 TO 19'-3 | 329 |
| 4c1 | WINGWALL, F.F.V. | | 76 VAR. | 2 EACH 2'-10 TO 14'-10 | 448 | 70 VAR. | 2 EACH 2'-10 TO 13'-10 | 390 | 64 VAR. | 2 EACH 2'-10 TO 12'-11 | 337 | 58 VAR. | 2 EACH 2'-10 TO 11'-11 | 286 | 52 VAR. | 2 EACH 2'-10 TO 10'-11 | 239 |
| 4c2 | WINGWALL, F.F.V. | | 36 VAR. | 2 EACH 9'-6 TO 15'-0 | 295 | 30 VAR. | 2 EACH 9'-6 TO 14'-0 | 235 | 24 VAR. | 2 EACH 9'-6 TO 13'-1 | 181 | 18 VAR. | 2 EACH 9'-6 TO 12'-1 | 130 | --- | --- | --- |
| 4c3 | WINGWALL, F.F.V. | | 4 | 13'-9 | 37 | 4 | 12'-9 | 34 | 2 | 11'-9 | 16 | 2 | 10'-9 | 14 | 2 | 9'-9 | 13 |
| 4c4 | INTERIOR WALLS, BOTH F.V. | | 4 | 1'-9 | 5 | 4 | 1'-9 | 5 | 4 | 1'-9 | 5 | 4 | 1'-9 | 5 | 4 | 1'-9 | 5 |
| 4c5 | INTERIOR WALLS, BOTH F.V. | | 100 VAR. | 2 EACH 2'-0 TO 12'-11 | 498 | 92 VAR. | 2 EACH 2'-0 TO 11'-11 | 428 | 84 VAR. | 2 EACH 2'-0 TO 10'-11 | 362 | 76 VAR. | 2 EACH 1'-11 TO 9'-11 | 300 | 68 VAR. | 2 EACH 1'-11 TO 8'-11 | 246 |
| 5c6 | WINGWALL, B.F.V. | | 12 VAR. | 2 EACH 2'-10 TO 4'-6 | 46 | 12 VAR. | 2 EACH 2'-10 TO 4'-6 | 46 | 12 VAR. | 2 EACH 2'-10 TO 4'-6 | 46 | 12 VAR. | 2 EACH 2'-10 TO 4'-6 | 46 | 12 VAR. | 2 EACH 2'-10 TO 4'-6 | 46 |
| 5c7 | WINGWALL, B.F.V. | | 64 VAR. | 2 EACH 8'-10 TO 18'-10 | 923 | 58 VAR. | 2 EACH 8'-10 TO 17'-10 | 807 | 52 VAR. | 2 EACH 8'-10 TO 16'-11 | 698 | 46 VAR. | 2 EACH 8'-10 TO 15'-11 | 594 | 40 VAR. | 2 EACH 8'-10 TO 14'-11 | 495 |
| 5c8 | WINGWALL, B.F.V. | | 50 | 10'-6 | 548 | 44 | 10'-6 | 482 | 38 | 10'-6 | 416 | 32 | 10'-6 | 350 | 26 | 10'-6 | 285 |
| 5c9 | WINGWALL, B.F.V. | | 4 | 17'-9 | 74 | 4 | 16'-9 | 70 | 2 | 15'-9 | 33 | 2 | 14'-9 | 31 | 2 | 13'-9 | 29 |
| 4d1 | APRON, LONGIT., BOTT. | | 25 | 27'-6 | 459 | 25 | 25'-6 | 426 | 25 | 23'-6 | 392 | 25 | 21'-6 | 359 | 25 | 19'-6 | 326 |
| 4d2 | APRON, LONGIT., BOTT. | | 6 | 35'-9 | 143 | 6 | 32'-8 | 131 | 6 | 29'-8 | 119 | 6 | 26'-7 | 107 | 6 | 23'-6 | 94 |
| 6f1 | APRON, LONGIT., TOP | | 37 | 27'-6 | 1528 | 37 | 25'-6 | 1417 | 37 | 23'-6 | 1306 | 37 | 21'-6 | 1195 | 37 | 19'-6 | 1084 |
| 6f2 | APRON, LONGIT., TOP | | 16 VAR. | 2 EACH 5'-10 TO 24'-10 | 368 | 16 VAR. | 2 EACH 3'-10 TO 22'-10 | 320 | 14 VAR. | 2 EACH 4'-6 TO 20'-10 | 266 | 12 VAR. | 2 EACH 5'-3 TO 18'-10 | 217 | 10 VAR. | 2 EACH 5'-11 TO 16'-10 | 171 |
| 6f3 | APRON, LONGIT., TOP | | 2 | 40'-11 | 130 | 2 | 37'-10 | 114 | 2 | 34'-9 | 104 | 2 | 31'-8 | 95 | 2 | 28'-7 | 86 |
| 4l1 | PARAPET, VERTICAL | | 77 | 6'-1 | 313 | 75 | 6'-1 | 305 | 75 | 6'-1 | 305 | 75 | 6'-1 | 305 | 75 | 6'-1 | 305 |
| 7j1 | PARAPET, HORIZONTAL | | 4 | 39'-8 | 324 | 4 | 39'-4 | 322 | 4 | 39'-0 | 319 | 4 | 39'-0 | 319 | 4 | 39'-0 | 319 |
| 6m1 | APRON, TRANS., TOP | | 34 VAR. | 39'-10 TO 52'-3 | 2463 | 31 VAR. | 39'-6 TO 50'-9 | 2199 | 29 VAR. | 39'-2 TO 49'-8 | 2023 | 26 VAR. | 39'-2 TO 48'-7 | 1791 | 23 VAR. | 39'-2 TO 47'-5 | 1563 |
| 6m2 | APRON, TRANS., BOTT. | | 24 VAR. | 33'-9 TO 45'-3 | 1461 | 22 VAR. | 33'-7 TO 44'-1 | 1313 | 20 VAR. | 33'-5 TO 42'-11 | 1167 | 18 VAR. | 33'-5 TO 41'-11 | 1032 | 16 VAR. | 33'-5 TO 40'-11 | 900 |
| 6p1 | CURTAIN, HORIZONTAL | | 4 | 38'-3 | 230 | 4 | 38'-1 | 229 | 4 | 37'-11 | 228 | 4 | 37'-11 | 228 | 4 | 37'-11 | 228 |
| 6p2 | CURTAIN, HORIZONTAL | | 8 | 18'-7 | 223 | 8 | 17'-4 | 208 | 8 | 16'-1 | 193 | 8 | 14'-10 | 178 | 8 | 13'-7 | 163 |
| 6s1 | WING SLOPE, BOTH F. | | 4 | 7'-8 | 46 | 4 | 7'-8 | 46 | 4 | 7'-8 | 46 | 4 | 7'-8 | 46 | 4 | 7'-8 | 46 |
| 6s2 | WING SLOPE, BOTH F. | | 4 | 37'-6 | 225 | 4 | 34'-3 | 206 | 4 | 31'-0 | 186 | 4 | 27'-9 | 167 | 4 | 24'-6 | 147 |
| 6s3 | WING SLOPE, F.F. | | 2 | 42'-9 | 135 | 2 | 39'-6 | 119 | 2 | 36'-3 | 109 | 2 | 33'-0 | 99 | 2 | 29'-9 | 89 |
| 6s4 | INTERIOR WALLS, BOTH F. | | 4 | 29'-10 | 179 | 4 | 27'-7 | 166 | 4 | 25'-4 | 152 | 4 | 23'-1 | 139 | 4 | 20'-11 | 126 |
| 5t1 | CURTAIN, VERTICAL | | 51 | 8'-0 | 426 | 49 | 7'-9 | 396 | 47 | 7'-6 | 368 | 45 | 7'-3 | 340 | 43 | 7'-0 | 314 |
| ESTIMATED QUANTITIES ONE HEADWALL | REINF. STEEL | | | 13,278 LB | | | 11,904 LB | | | 10,633 LB | | | 9415 LB | | | 8168 LB | |
| | CONCRETE | PARAPET Δ | 3.8 | | | 3.7 | | | 3.6 | | | 3.6 | | | 3.6 | | |
| | | WINGWALLS | 34.0 | 112.5 CY | | 26.5 | 97.2 CY | | 20.4 | 83.7 CY | | 16.9 | 73.7 CY | | 13.7 | 63.1 CY | |
| | | FOOTING * | 74.7 | | | 67.0 | | | 59.7 | | | 53.2 | | | 45.8 | | |

| BAR | LOCATION | 12' x 7' NO. | 12' x 7' LENGTH | 12' x 7' WT. | 12' x 6' NO. | 12' x 6' LENGTH | 12' x 6' WT. | 12' x 5' NO. | 12' x 5' LENGTH | 12' x 5' WT. | 12' x 4' NO. | 12' x 4' LENGTH | 12' x 4' WT. | 10' x 12' NO. | 10' x 12' LENGTH | 10' x 12' WT. | 10' x 11' NO. | 10' x 11' LENGTH | 10' x 11' WT. | 10' x 10' NO. | 10' x 10' LENGTH | 10' x 10' WT. | BAR |
|---|---|---|---|---|---|---|---|---|---|---|---|---|---|---|---|---|---|---|---|---|---|---|---|
| 5fa | FENCE ANCHOR (GALV.) | 2 | 2'-10 | 6 | 2 | 2'-10 | 6 | 2 | 2'-10 | 6 | 2 | 2'-10 | 6 | 2 | 2'-10 | 6 | 2 | 2'-10 | 6 | 2 | 2'-10 | 6 | 5fa |
| 4b1 | WINGWALL, B.F.H. | 2 | 25'-5 | 34 | 2 | 22'-4 | 30 | 2 | 19'-3 | 26 | 2 | 16'-2 | 22 | 2 | 40'-10 | 58 | 2 | 37'-9 | 50 | 2 | 34'-8 | 46 | 4b1 |
| 4b2 | WINGWALL, B.F.H. | 10 VAR. | 2 EACH 11'-7 TO 24'-0 | 119 | 8 VAR. | 2 EACH 11'-7 TO 20'-11 | 87 | 6 VAR. | 2 EACH 11'-7 TO 17'-10 | 59 | 4 VAR. | 2 EACH 11'-7 TO 14'-9 | 35 | 20 VAR. | 2 EACH 11'-7 TO 39'-5 | 341 | 18 VAR. | 2 EACH 11'-7 TO 36'-4 | 288 | 16 VAR. | 2 EACH 11'-7 TO 33'-3 | 240 | 4b2 |
| 5b3 | WINGWALL, F.F.H. | 2 | 25'-5 | 53 | 2 | 22'-4 | 47 | 2 | 19'-3 | 40 | 2 | 16'-2 | 34 | 2 | 40'-11 | 90 | 2 | 37'-10 | 79 | 2 | 34'-9 | 72 | 5b3 |
| 5b4 | WINGWALL, F.F.H. | 12 VAR. | 2 EACH 8'-7 TO 24'-0 | 204 | 10 VAR. | 2 EACH 8'-7 TO 20'-11 | 154 | 8 VAR. | 2 EACH 8'-7 TO 17'-10 | 110 | 6 VAR. | 2 EACH 8'-7 TO 14'-9 | 73 | 22 VAR. | 2 EACH 8'-6 TO 39'-6 | 551 | 20 VAR. | 2 EACH 8'-6 TO 36'-5 | 468 | 18 VAR. | 2 EACH 8'-7 TO 33'-4 | 393 | 5b4 |
| 5b5 | INTERIOR WALLS, BOTH F.H. | 22 VAR. | 2 EACH 5'-1 TO 17'-3 | 256 | 18 VAR. | 2 EACH 5'-1 TO 15'-3 | 191 | 14 VAR. | 2 EACH 5'-3 TO 13'-3 | 135 | 10 VAR. | 2 EACH 5'-5 TO 11'-2 | 86 | 42 VAR. | 2 EACH 4'-10 TO 27'-4 | 705 | 38 VAR. | 2 EACH 4'-11 TO 25'-4 | 599 | 34 VAR. | 2 EACH 4'-11 TO 23'-3 | 499 | 5b5 |
| 4c1 | WINGWALL, F.F.V. | 46 VAR. | 2 EACH 2'-10 TO 10'-0 | 197 | 40 VAR. | 2 EACH 2'-10 TO 9'-0 | 158 | 32 VAR. | 2 EACH 2'-10 TO 7'-9 | 113 | 26 VAR. | 2 EACH 2'-10 TO 6'-9 | 83 | 76 VAR. | 2 EACH 2'-9 TO 14'-9 | 444 | 70 VAR. | 2 EACH 2'-9 TO 13'-9 | 386 | 64 VAR. | 2 EACH 2'-9 TO 12'-10 | 333 | 4c1 |
| 4c2 | WINGWALL, F.F.V. | --- | --- | --- | --- | --- | --- | --- | --- | --- | --- | --- | --- | 36 VAR. | 2 EACH 9'-5 TO 14'-11 | 293 | 30 VAR. | 2 EACH 9'-5 TO 13'-11 | 234 | 24 VAR. | 2 EACH 9'-5 TO 13'-0 | 180 | 4c2 |
| 4c3 | WINGWALL, F.F.V. | 2 | 8'-9 | 12 | 2 | 7'-9 | 10 | 4 | 6'-9 | 18 | 4 | 5'-9 | 15 | 4 | 13'-8 | 37 | 4 | 12'-8 | 34 | 2 | 11'-8 | 16 | 4c3 |
| 4c4 | INTERIOR WALLS, BOTH F.V. | 4 | 1'-9 | 5 | 4 | 1'-9 | 5 | 4 | 1'-9 | 5 | 4 | 1'-8 | 4 | 4 | 1'-8 | 4 | 4 | 1'-8 | 4 | 4 | 1'-8 | 4 | 4c4 |
| 4c5 | INTERIOR WALLS, BOTH F.V. | 60 VAR. | 2 EACH 1'-11 TO 7'-10 | 195 | 52 VAR. | 2 EACH 1'-11 TO 6'-10 | 152 | 44 VAR. | 2 EACH 1'-11 TO 5'-10 | 114 | 36 VAR. | 2 EACH 1'-11 TO 4'-10 | 81 | 100 VAR. | 2 EACH 1'-11 TO 12'-10 | 493 | 92 VAR. | 2 EACH 1'-11 TO 11'-10 | 423 | 84 VAR. | 2 EACH 1'-11 TO 10'-10 | 358 | 4c5 |
| 5c6 | WINGWALL, B.F.V. | 12 VAR. | 2 EACH 2'-10 TO 4'-6 | 46 | 12 VAR. | 2 EACH 2'-10 TO 4'-6 | 46 | 12 VAR. | 2 EACH 2'-10 TO 4'-6 | 46 | 12 VAR. | 2 EACH 2'-10 TO 4'-6 | 46 | 12 VAR. | 2 EACH 2'-9 TO 4'-5 | 45 | 12 VAR. | 2 EACH 2'-9 TO 4'-5 | 45 | 12 VAR. | 2 EACH 2'-9 TO 4'-5 | 45 | 5c6 |
| 5c7 | WINGWALL, B.F.V. | 34 VAR. | 2 EACH 8'-10 TO 14'-0 | 405 | 28 VAR. | 2 EACH 8'-10 TO 13'-0 | 319 | 20 VAR. | 2 EACH 8'-10 TO 11'-9 | 215 | 14 VAR. | 2 EACH 8'-10 TO 10'-9 | 143 | 64 VAR. | 2 EACH 8'-9 TO 18'-9 | 918 | 58 VAR. | 2 EACH 8'-9 TO 17'-9 | 802 | 52 VAR. | 2 EACH 8'-9 TO 16'-10 | 694 | 5c7 |
| 5c8 | WINGWALL, B.F.V. | 20 | 10'-6 | 219 | 14 | 10'-6 | 153 | --- | --- | --- | --- | --- | --- | 50 | 10'-6 | 548 | 44 | 10'-6 | 482 | 38 | 10'-6 | 416 | 5c8 |
| 5c9 | WINGWALL, B.F.V. | 2 | 12'-9 | 27 | 2 | 11'-9 | 25 | 4 | 10'-9 | 45 | 4 | 9'-9 | 41 | 4 | 17'-8 | 74 | 4 | 16'-8 | 70 | 2 | 15'-8 | 33 | 5c9 |
| 4d1 | APRON, LONGIT., BOTT. | 25 | 17'-6 | 292 | 25 | 15'-6 | 259 | 25 | 13'-6 | 225 | 25 | 11'-6 | 192 | 21 | 27'-6 | 386 | 21 | 25'-6 | 358 | 21 | 23'-6 | 330 | 4d1 |
| 4d2 | APRON, LONGIT., BOTT. | 6 | 20'-6 | 82 | 6 | 17'-5 | 70 | 6 | 14'-5 | 58 | 6 | 11'-6 | 46 | 6 | 35'-9 | 143 | 6 | 32'-8 | 131 | 6 | 29'-8 | 119 | 4d2 |
| 6f1 | APRON, LONGIT., TOP | 37 | 17'-6 | 973 | 37 | 15'-6 | 861 | 37 | 13'-6 | 750 | 37 | 11'-6 | 639 | 31 | 27'-6 | 1280 | 31 | 25'-6 | 1187 | 31 | 23'-6 | 1094 | 6f1 |
| 6f2 | APRON, LONGIT., TOP | 10 VAR. | 2 EACH 3'-11 TO 14'-10 | 141 | 8 VAR. | 2 EACH 4'-7 TO 12'-10 | 105 | 6 VAR. | 2 EACH 5'-4 TO 10'-10 | 73 | 4 VAR. | 2 EACH 6'-1 TO 8'-10 | 45 | 16 VAR. | 2 EACH 5'-10 TO 24'-10 | 368 | 16 VAR. | 2 EACH 3'-10 TO 22'-10 | 320 | 14 VAR. | 2 EACH 4'-6 TO 20'-10 | 266 | 6f2 |
| 6f3 | APRON, LONGIT., TOP | 2 | 25'-5 | 76 | 2 | 22'-4 | 67 | 2 | 19'-3 | 58 | 2 | 16'-2 | 49 | 2 | 40'-11 | 130 | 2 | 37'-10 | 114 | 2 | 34'-9 | 104 | 6f3 |
| 4l1 | PARAPET, VERTICAL | 75 | 6'-1 | 305 | 75 | 6'-1 | 305 | 75 | 6'-1 | 305 | 75 | 6'-1 | 305 | 65 | 6'-1 | 264 | 63 | 6'-1 | 256 | 63 | 6'-1 | 256 | 4l1 |
| 7j1 | PARAPET, HORIZONTAL | 4 | 38'-8 | 316 | 4 | 38'-8 | 316 | 4 | 38'-8 | 316 | 4 | 38'-8 | 316 | 4 | 33'-8 | 275 | 4 | 33'-4 | 273 | 4 | 33'-0 | 270 | 7j1 |
| 6m1 | APRON, TRANS., TOP | 21 VAR. | 38'-10 TO 46'-4 | 1401 | 18 VAR. | 38'-10 TO 45'-3 | 1184 | 15 VAR. | 38'-10 TO 44'-1 | 971 | 13 VAR. | 38'-10 TO 43'-4 | 833 | 34 VAR. | 33'-10 TO 46'-3 | 2102 | 31 VAR. | 33'-6 TO 44'-9 | 1866 | 29 VAR. | 33'-2 TO 43'-8 | 1707 | 6m1 |
| 6m2 | APRON, TRANS., BOTT. | 14 VAR. | 33'-3 TO 39'-9 | 768 | 12 VAR. | 33'-3 TO 38'-9 | 649 | 10 VAR. | 33'-3 TO 37'-9 | 533 | 8 VAR. | 33'-3 TO 36'-9 | 421 | 24 VAR. | 27'-9 TO 39'-3 | 1208 | 22 VAR. | 27'-7 TO 38'-1 | 1085 | 20 VAR. | 27'-5 TO 36'-11 | 966 | 6m2 |
| 6p1 | CURTAIN, HORIZONTAL | 4 | 37'-9 | 227 | 4 | 37'-9 | 227 | 4 | 37'-9 | 227 | 4 | 37'-9 | 227 | 4 | 32'-3 | 194 | 4 | 32'-1 | 193 | 4 | 31'-11 | 192 | 6p1 |
| 6p2 | CURTAIN, HORIZONTAL | 8 | 12'-4 | 148 | 8 | 11'-1 | 133 | 8 | 9'-10 | 118 | 8 | 8'-7 | 103 | 8 | 18'-7 | 223 | 8 | 17'-4 | 208 | 8 | 16'-1 | 193 | 6p2 |
| 6s1 | WING SLOPE, BOTH F. | 4 | 7'-8 | 46 | 4 | 7'-8 | 46 | 4 | 7'-8 | 46 | 4 | 7'-8 | 46 | 4 | 7'-8 | 46 | 4 | 7'-8 | 46 | 4 | 7'-8 | 46 | 6s1 |
| 6s2 | WING SLOPE, BOTH F. | 4 | 21'-3 | 128 | 4 | 18'-0 | 108 | 4 | 14'-9 | 89 | 4 | 11'-6 | 69 | 4 | 37'-6 | 225 | 4 | 34'-3 | 206 | 4 | 31'-0 | 186 | 6s2 |
| 6s3 | WING SLOPE, F.F. | 2 | 26'-6 | 80 | 2 | 23'-3 | 70 | 2 | 20'-0 | 60 | 2 | 16'-9 | 50 | 2 | 42'-9 | 135 | 2 | 39'-6 | 119 | 2 | 36'-3 | 109 | 6s3 |
| 6s4 | INTERIOR WALLS, BOTH F. | 4 | 18'-8 | 112 | 4 | 16'-5 | 99 | 4 | 14'-2 | 85 | 4 | 11'-11 | 72 | 4 | 29'-10 | 179 | 4 | 27'-7 | 166 | 4 | 25'-4 | 152 | 6s4 |
| 5t1 | CURTAIN, VERTICAL | 41 | 6'-9 | 289 | 39 | 6'-6 | 264 | 37 | 6'-6 | 251 | 35 | 6'-6 | 237 | 47 | 8'-0 | 392 | 45 | 7'-9 | 364 | 43 | 7'-6 | 336 | 5t1 |
| ESTIMATED QUANTITIES ONE HEADWALL | REINF. STEEL | | 7162 LB | | | 6146 LB | | | 5097 LB | | | 4319 LB | | | 12,157 LB | | | 10,862 LB | | | 9661 LB | | |
| | CONCRETE PARAPET Δ | 3.5 | | | 3.5 | | | 3.5 | | | 3.5 | | | 3.3 | | | 3.2 | | | 3.1 | | |
| | WINGWALLS | 9.7 | 53.6 CY | | 7.4 | 45.5 CY | | 5.4 | 38.6 CY | | 3.7 | 32.1 CY | | 34.0 | 101.0 CY | | 26.5 | 86.6 CY | | 20.4 | 74.0 CY | |
| | FOOTING * | 40.4 | | | 34.6 | | | 29.7 | | | 24.9 | | | 63.7 | | | 56.9 | | | 50.5 | | |

Δ INCLUDES TOP OF WINGWALL QUANTITIES.
* ASSUMES APRON AND FLOOR ARE EQUAL THICKNESS, ADJUST CONCRETE QUANTITIES FOR TRANSITION WHERE APRON AND FLOOR THICKNESS ARE NOT EQUAL.

NOTE:
WEIGHT OF BARS OVER 40'-0 LONG INCLUDES AN ALLOWANCE OF 2'-3 FOR LAP.
LENGTHS SHOWN FOR BARS OVER 40'-0 LONG DO NOT INCLUDE LAP.

## BENT BAR DETAILS

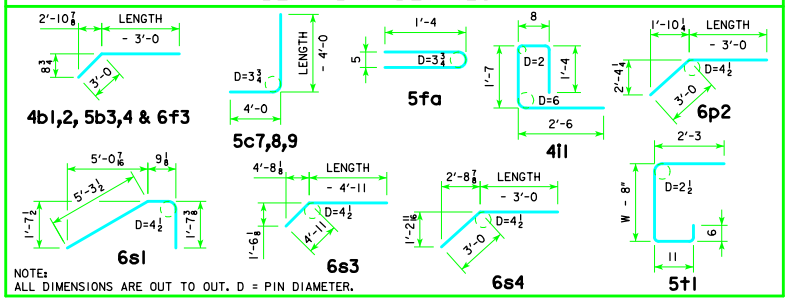


NOTE:
ALL DIMENSIONS ARE OUT TO OUT. D = PIN DIAMETER.

## HEADWALL NOTES:

1. SEE DRAWING TRRCB GI-12 FOR GENERAL INFORMATION, SPECIFICATIONS, AND DESIGN STRESSES.
2. THIS HEADWALL IS BASED ON A 3:1 SLOPE NORMAL TO CENTERLINE OF ROADWAY.
3. THE SIDES OF THE FOOTING ARE TO BE FORMED TO INSURE CORRECT LINE AND GRADE.
4. ALL SLAB AND FLOOR REINFORCING STEEL IS TO BE SUPPORTED BY BAR CHAIRS AT INTERVALS OF NOT MORE THAN 3'-0 IN EITHER DIRECTION AS OUTLINED IN THE STANDARD SPECIFICATIONS.
5. CLEAR DISTANCE FROM FACE OF CONCRETE TO NEAR REINFORCING BAR IS TO BE 2" UNLESS OTHERWISE NOTED OR SHOWN. CLEARANCE TO THE BOTTOM ENDS OF VERTICAL BARS SHALL BE 3 INCHES.
6. CONCRETE QUANTITIES ARE ESTIMATED FROM BACK OF PARAPET.
7. HORIZONTAL TAILS OF BARS "b" & "s" ESTIMATED TO EXTEND 2'-0 BEYOND BACK OF PARAPET (INTO END OF BARREL). LONGITUDINAL BARS "d", "6f1", AND "6f3" ESTIMATED TO PROJECT INTO END SECTION OF BARREL A MINIMUM OF 2'-0 BEYOND BACK OF PARAPET.
8. THE "LENGTH" COLUMN REFLECTS TOTAL NUMBER OF FEET NECESSARY TO MEET THESE REQUIREMENTS.

LATEST REVISION DATE

APPROVED BY BRIDGE ENGINEER

Iowa Department of Transportation
Highway Division

STANDARD DESIGN

# TRIPLE REINFORCED CONCRETE BOX CULVERTS

APRIL, 2012

## FLARED WING HEADWALLS

0° SKEW

TRH 0-5-12

ENGLISHLRFDSIGNEDTRIPLECULVERTS.DGN - TRH 0-5-12 - THIS SHEET ISSUED 04-12.