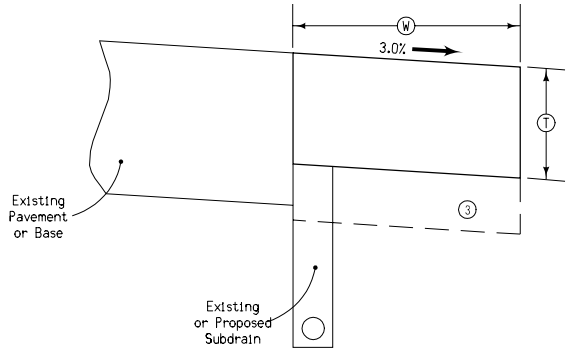

Hot Mix Asphalt
Widening on Existing
Pavement Without Curb

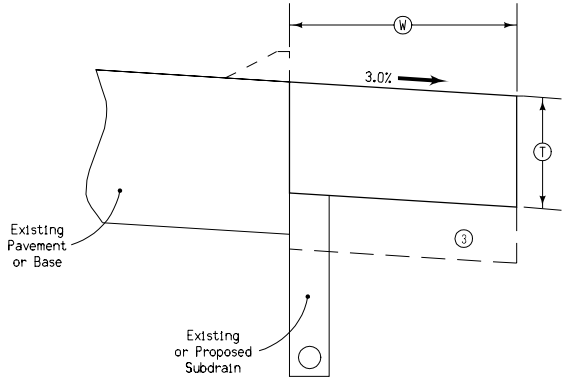

Hot Mix Asphalt
Widening on Existing
Pavement With Curb

'W' and 'T' shall be as specified as part of the individual project plans. Dimensions may vary for superelevated curves or at locations specifically designated by the Engineer.

Any asphalt materials excavated shall be handled as detailed elsewhere in the project plans.

Special shaping of widening units through bridge approach sections shall be done at the direction of the Engineer.

Excavation in excess of that indicated shall be considered incidental to other work on the project.

Special Backfill, as indicated, shall be placed only at locations where specifically required by the Engineer. Any such Special Backfill placed shall be paid for as "Extra Work" as per Article 1109.03 of the Standard Specifications.

1. Estimated for two (2) applications of tack coat. Priming of subgrade or finished base is not required.
2. Quantities indicated are for design purposes and may be adjusted at time of construction when so directed by the Engineer.
3. 6" Special backfill required when widening unit is part of the proposed traffic lane or when noted in project plans.

Design Rates	
Item	Rate
Base Course	145 lbs./cu. ft.
Special Backfill	140 lbs./cu. ft.
Tack Coat	0.05 gal./sq. yd

Design Quantities per side per station ②

Quantities Per Side	Thickness (Inches)																	Special Backfill Tons	Width Feet
	3.0	3.5	4.0	4.5	5.0	5.5	6.0	6.5	7.0	7.5	8.0	8.5	9.0	9.5	10.0	10.5	11.0		
HMA Base (Tons)	1.81	2.11	2.42	2.72	3.02	3.32	3.63	3.93	4.23	4.53	4.83	5.14	5.44	5.74	6.04	6.34	6.65	3.50	1
Tack Coat (Gal) ①	1.11	1.11	1.11	1.11	1.11	1.11	1.11	1.11	1.11	1.11	1.11	1.11	1.11	1.11	1.11	1.11	1.11		
Class 13 Excavation, Widening (Cu. Yds.)	0.93	1.08	1.23	1.39	1.54	1.70	1.85	2.01	2.16	2.31	2.47	2.62	2.78	2.93	3.09	3.24	3.40		
HMA Base (Tons)	3.63	4.23	4.83	5.44	6.04	6.65	7.25	7.85	8.46	9.06	9.67	10.27	10.88	11.48	12.08	12.69	13.29	7.00	2
Tack Coat (Gal) ①	2.22	2.22	2.22	2.22	2.22	2.22	2.22	2.22	2.22	2.22	2.22	2.22	2.22	2.22	2.22	2.22	2.22		
Class 13 Excavation, Widening (Cu. Yds.)	1.85	2.16	2.47	2.78	3.09	3.40	3.70	4.01	4.32	4.63	4.94	5.25	5.56	5.86	6.17	6.48	6.79		
HMA Base (Tons)	5.44	6.34	7.25	8.16	9.06	9.97	10.88	11.78	12.69	13.59	14.50	15.41	16.31	17.22	18.13	19.03	19.94	10.50	3
Tack Coat (Gal) ①	3.33	3.33	3.33	3.33	3.33	3.33	3.33	3.33	3.33	3.33	3.33	3.33	3.33	3.33	3.33	3.33	3.33		
Class 13 Excavation, Widening (Cu. Yds.)	2.78	3.24	3.70	4.17	4.63	5.09	5.56	6.02	6.48	6.94	7.41	7.87	8.33	8.80	9.26	9.72	10.19		
HMA Base (Tons)	7.25	8.46	9.67	10.88	12.08	13.29	14.50	15.71	16.92	18.13	19.33	20.54	21.75	22.96	24.17	25.38	26.58	14.00	4
Tack Coat (Gal) ①	4.44	4.44	4.44	4.44	4.44	4.44	4.44	4.44	4.44	4.44	4.44	4.44	4.44	4.44	4.44	4.44	4.44		
Class 13 Excavation, Widening (Cu. Yds.)	3.70	4.32	4.94	5.56	6.17	6.79	7.41	8.02	8.64	9.26	9.88	10.49	11.11	11.73	12.35	12.96	13.58		

Iowa Department of Transportation

STANDARD ROAD PLAN

REVISION 13 10-17-06

RG-8

SHEET 1 of 1

REVISIONS: Deleted details of shoulders and added additional quantities.

Deanna Maifield
APPROVED BY DESIGN METHODS ENGINEER

HOT MIX ASPHALT
BASE WIDENING