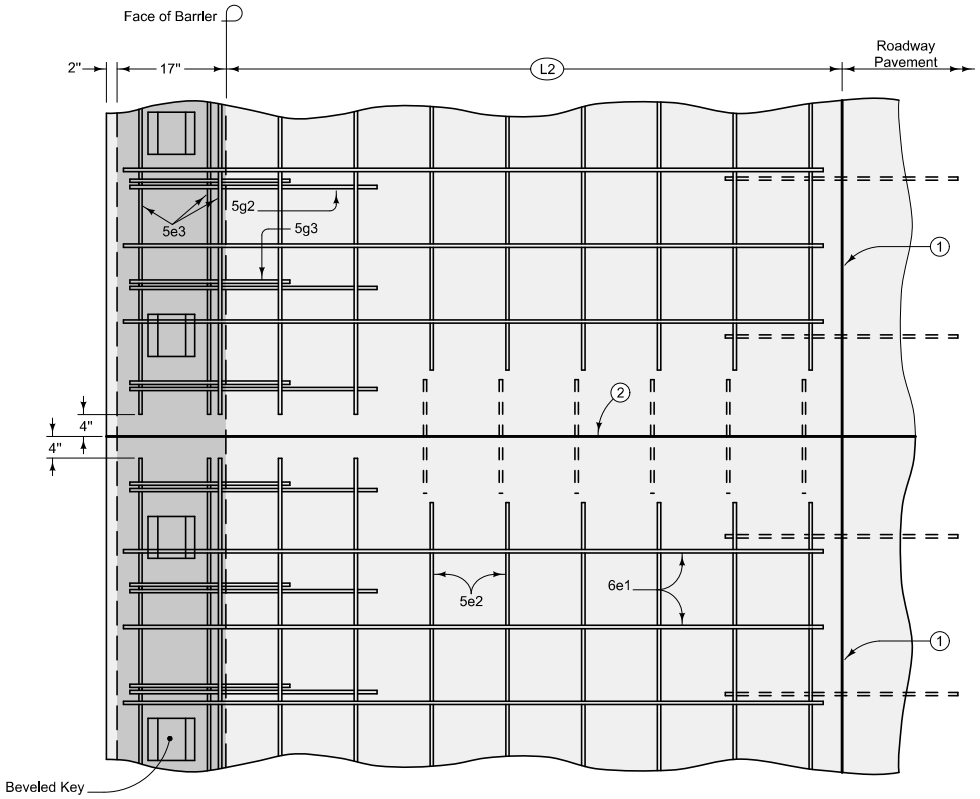

PLAN

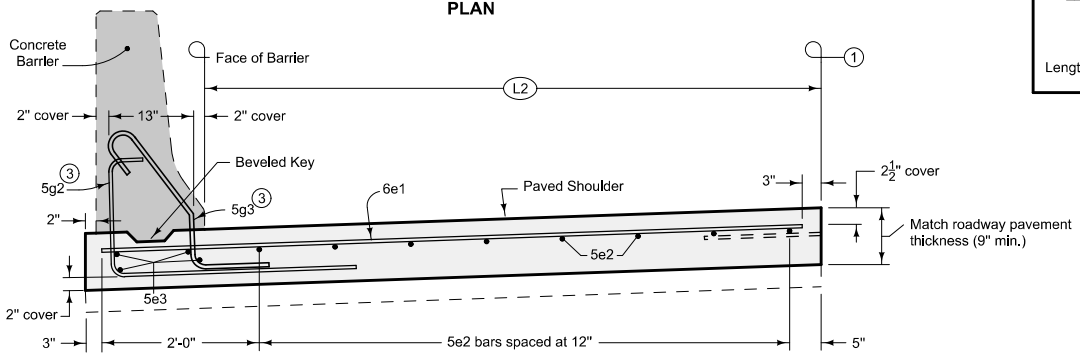

TYPICAL SECTION

REINFORCING BAR LIST Per Shoulder Panel (Approximately 20 Linear Feet)				
L2	Bar	Number of Bars	Length	Spacing
4'	6e1	18	5'-1"	12"
	5e2	4	18'-0"	12"
6'	6e1	18	7'-1"	12"
	5e2	6	18'-0"	12"
8'	6e1	18	9'-1"	12"
	5e2	8	18'-0"	12"
10'	6e1	18	11'-1"	12"
	5e2	10	18'-0"	12"
12'	6e1	18	13'-1"	12"
	5e2	12	18'-0"	12"
Applies to all Shoulder Widths	5e3	4	18'-8"	See Drawing
	5g2 (3)	varies	varies	(5)
	5g3 (3)	varies	varies	(5)

ESTIMATED SHOULDER QUANTITIES Per Linear Foot					
	L2				
	4'	6'	8'	10'	12'
Concrete Sq. Yds.	0.62	0.84	1.06	1.29	1.51

BENT BAR DETAILS

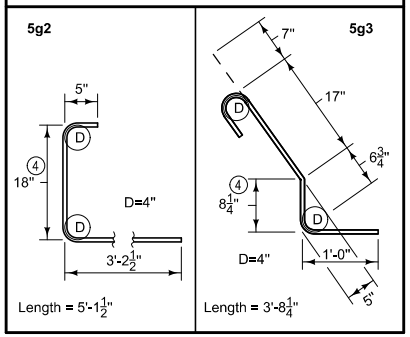

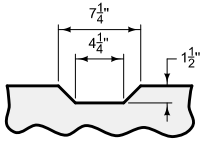

BEVELED KEY

Use 2 x 8 lumber 8" long to make keys.
Place keys at 2'-8" centers.

(1) 'L-2' or 'KT-2' joint. When roadway pavement is existing, use 'BT-3' joint. See PV-101.

(2) 'CD' joint. Match roadway joint locations. See PV-101. No 'CD' joint baskets required within 4' of outside edge of shoulder.

(3) When shoulder will be located under a concrete barrier end section, replace 5g2 and 5g3 bars with reinforcement as shown on BA-107.

(4) Increase these dimensions by one inch for every inch of paved shoulder thickness greater than 9 inches.

(5) Match spacing of vertical bars in concrete barrier.

Possible Contract Item:
Reinforced Paved Shoulder

Possible Tabulation:
108-18B

Iowa Department of Transportation

REVISION 3 04-17-12

STANDARD ROAD PLAN

BA-106

SHEET 1 of 1

REVISIONS: Made spacing and dimensions of 5g2 and 5g3 bars dependent upon concrete barrier bar spacing and paved shoulder thickness.

Deanna Maifield
APPROVED BY DESIGN METHODS ENGINEER

REINFORCED PAVED SHOULDER FOR CONCRETE BARRIER