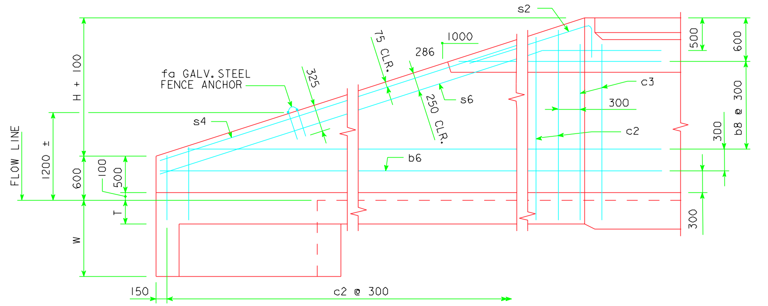

TYPICAL VIEW - FRONT FACE REINFORCING SHORT WINGWALL

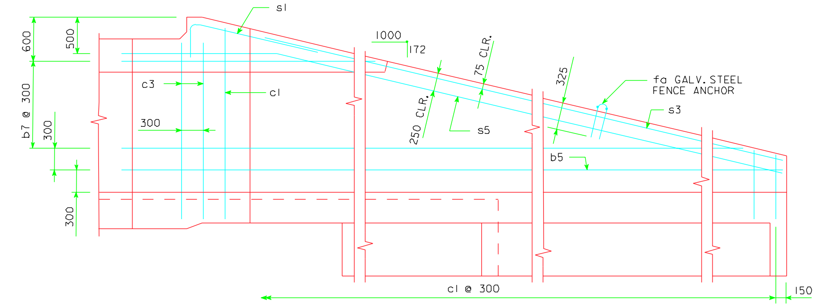

TYPICAL VIEW - FRONT FACE REINFORCING LONG WINGWALL

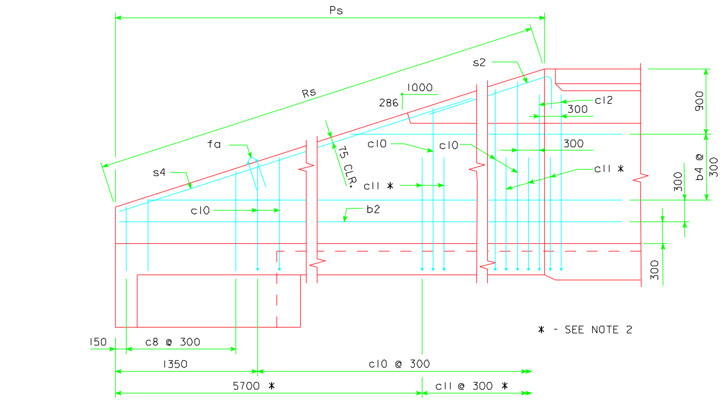

TYPICAL VIEW - BACK FACE REINFORCING SHORT WINGWALL

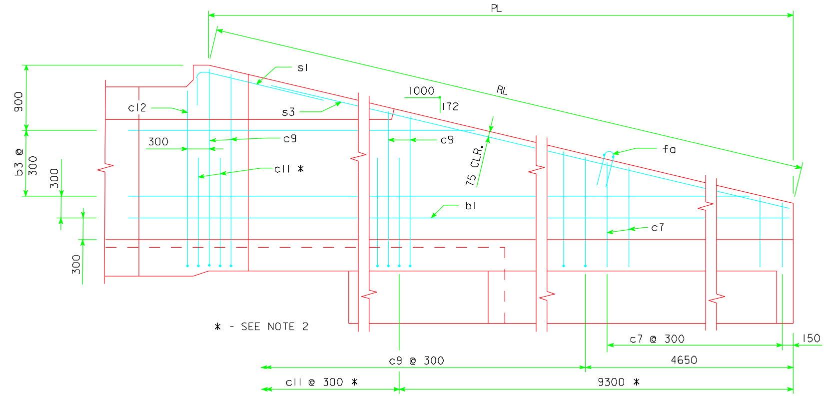

TYPICAL VIEW - BACK FACE REINFORCING LONG WINGWALL

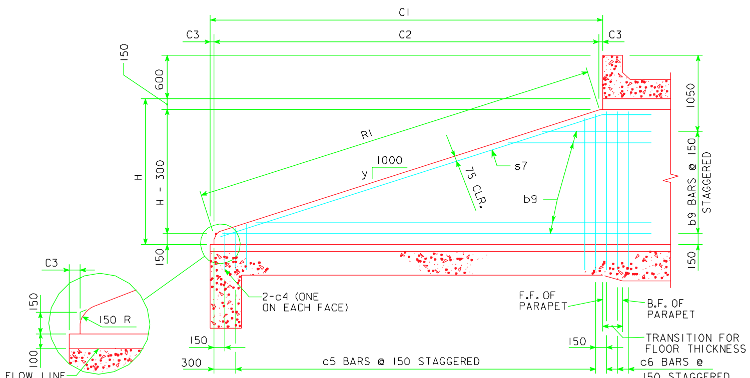

TYPICAL VIEW - CENTER WALL

CULVERT HEIGHT (H)	SLOPE y mm
1800	292
2400	308
3000	317
3600	325

NOTE:

1. BAR SPACINGS AND POSITIONS SHOWN ARE SIMILAR FOR ALL SIZES OF HEADWALLS IN THIS STANDARD.
2. NOT APPLICABLE TO HEADWALL HEIGHT OF H = 1800 mm.
3. FOR DIMENSION TABLE SEE SHEET MTWH 45-1-95.

LATEST REVISION DATE :

APPROVED BY : William A. Lundquist

STANDARD DESIGN

FLARED WING HEADWALLS

FOR

TWIN REINFORCED CONCRETE BOX CULVERTS

PROJECT DEVELOPMENT DIVISION
IOWA DEPARTMENT OF TRANSPORTATION

JULY, 1995

MTWH 45-5-95

TWH455M.SOI

XXXXXXXXXXSYSTEMTIME XXXXXXXUSERNAME XXXXXXXXXXXXXXXXXXXXXXXXXXXXXXXXXXXXXXXXXXXXXXXXXXXXXXXXXXDGNSPEC