BILL OF REINF. FOR ONE HEADWALL 30° SKEW CULVERT SPAN X CULVERT HEIGHT

LOCATION ΔΔ	SHAPE	SIZE	MARK	2400×3000 NO.	2400×3000 LENGTH	2400×3000 MASS	2400×2400 NO.	2400×2400 LENGTH	2400×2400 MASS	2400×1800 NO.	2400×1800 LENGTH	2400×1800 MASS	2400×1500 NO.	2400×1500 LENGTH	2400×1500 MASS	2400×1200 NO.	2400×1200 LENGTH	2400×1200 MASS	MARK
FENCE ANCHOR		15	fa	2	930	3	2	930	3	2	930	3	2	930	3	2	930	3	fa
WINGWALL, BFH L		15	b1	1	13 790	22	1	11 280	18	1	8780	14	1	7530	12	1	6280	10	b1
WINGWALL, BFH S		15	b2	1	10 520	17	1	8650	14	1	6780	11	1	5840	9	1	4910	8	b2
WINGWALL BFH L		15	b3	8 (LENGTH VARIES)	4330 TO 13 100	110	6 (LENGTH VARIES)	4330 TO 10 590	70	4 (LENGTH VARIES)	4330 TO 8090	39	3 (LENGTH VARIES)	4330 TO 6840	26	2 (LENGTH VARIES)	4330 TO 5590	16	b3
WINGWALL BFH S		15	b4	8 (LENGTH VARIES)	3460 TO 10 020	85	6 (LENGTH VARIES)	3460 TO 8140	55	4 (LENGTH VARIES)	3460 TO 6270	31	3 (LENGTH VARIES)	3460 TO 5340	21	2 (LENGTH VARIES)	3460 TO 4400	12	b4
WINGWALL FFH L		15	b5	1	13 790	22	1	11 280	18	1	8780	14	1	7530	12	1	6280	10	b5
WINGWALL FFH S		15	b6	1	10 520	17	1	8650	14	1	6780	11	1	5840	9	1	4910	8	b6
WINGWALL FFH L		15	b7	9 (LENGTH VARIES)	3080 TO 13 100	115	7 (LENGTH VARIES)	3080 TO 10 590	75	5 (LENGTH VARIES)	3080 TO 8090	44	4 (LENGTH VARIES)	3080 TO 6840	31	3 (LENGTH VARIES)	3080 TO 5590	20	b7
WINGWALL FFH S		15	b8	9 (LENGTH VARIES)	2530 TO 10 020	89	7 (LENGTH VARIES)	2530 TO 8140	59	5 (LENGTH VARIES)	2530 TO 6270	35	4 (LENGTH VARIES)	2530 TO 5340	25	3 (LENGTH VARIES)	2530 TO 4400	16	b8
WINGWALL FFV L		15	c1	43 (LENGTH VARIES)	760 TO 3780	153	35 (LENGTH VARIES)	760 TO 3210	109	26 (LENGTH VARIES)	760 TO 2560	68	22 (LENGTH VARIES)	760 TO 2270	52	18 (LENGTH VARIES)	760 TO 1990	39	c1
WINGWALL FFV S		15	c2	32 (LENGTH VARIES)	770 TO 3760	114	26 (LENGTH VARIES)	770 TO 3180	81	20 (LENGTH VARIES)	770 TO 2600	53	17 (LENGTH VARIES)	770 TO 2310	41	14 (LENGTH VARIES)	770 TO 2020	31	c2
WINGWALL FFV L		15	c3	2	3700	12	1	3100	5	1	2500	4	2	2200	7	1	1900	3	c3
WINGWALL FFV S		15	c3	2	3700	12	1	3100	5	2	2500	8	1	2200	3	1	1900	3	c3
WINGWALL BFV L		15	c4	11 (LENGTH VARIES)	760 TO 1480	19	11 (LENGTH VARIES)	760 TO 1480	19	11 (LENGTH VARIES)	760 TO 1480	19	11 (LENGTH VARIES)	760 TO 1480	19	11 (LENGTH VARIES)	760 TO 1480	19	c4
WINGWALL BFV S		15	c5	6 (LENGTH VARIES)	770 TO 1260	10	6 (LENGTH VARIES)	770 TO 1260	10	6 (LENGTH VARIES)	770 TO 1260	10	6 (LENGTH VARIES)	770 TO 1260	10	6 (LENGTH VARIES)	770 TO 1260	10	c5
WINGWALL BFV L		15	c6	32 (LENGTH VARIES)	2760 TO 4980	194	24 (LENGTH VARIES)	2760 TO 4410	135	15 (LENGTH VARIES)	2760 TO 3760	77	11 (LENGTH VARIES)	2760 TO 3470	54	7 (LENGTH VARIES)	2760 TO 3190	33	c6
WINGWALL BFV S		15	c7	26 (LENGTH VARIES)	2550 TO 4960	153	20 (LENGTH VARIES)	2550 TO 4380	109	14 (LENGTH VARIES)	2550 TO 3800	70	11 (LENGTH VARIES)	2550 TO 3510	52	8 (LENGTH VARIES)	2550 TO 3220	36	c7
WINGWALL BFV L		15	c8	21	3150	104	13	3150	64	---	---	0	---	---	0	---	---	0	c8
WINGWALL BFV S		15	c8	14	3150	69	8	3150	40	---	---	0	---	---	0	---	---	0	c8
WINGWALL BFV L		15	c9	2	4900	15	1	4300	7	1	3700	6	2	3400	11	1	3100	5	c9
WINGWALL BFV S		15	c9	2	4900	15	1	4300	7	2	3700	12	1	3400	5	1	3100	5	c9
APRON, LONG BOT		15	d1	5	8140	64	5	6760	53	5	5370	42	5	4680	37	5	3980	31	d1
APRON, LONG BOT L		15	d2	3	12 360	58	3	9870	46	3	7400	35	3	6170	29	3	4950	23	d2
APRON, LONG BOT S		15	d3	3	9800	44	3	7450	35	3	5600	26	3	4690	22	3	3780	18	d3
APRON, LONG TOP		20	f1	8	8140	153	8	6760	127	8	5370	101	8	4680	88	8	3980	75	f1
APRON, LONG TOP L		20	f2	10 (LENGTH VARIES)	570 TO 6820	87	8 (LENGTH VARIES)	550 TO 5440	56	6 (LENGTH VARIES)	540 TO 4050	32	5 (LENGTH VARIES)	540 TO 3350	23	4 (LENGTH VARIES)	530 TO 2660	15	f2
APRON, LONG TOP S		20	f3	7 (LENGTH VARIES)	1170 TO 6770	65	6 (LENGTH VARIES)	690 TO 5380	43	4 (LENGTH VARIES)	1160 TO 3990	24	4 (LENGTH VARIES)	450 TO 3300	18	3 (LENGTH VARIES)	680 TO 2600	12	f3
APRON, LONG TOP L		20	f4	1	13 790	32	1	11 280	27	1	8780	21	1	7530	18	1	6280	15	f4
APRON, LONG TOP S		20	f5	1	10 520	25	1	8650	20	1	6780	16	1	5840	14	1	4910	12	f5
PARAPET, VERT		15	j1	17	1930	52	17	1930	52	17	1930	52	17	1930	52	17	1930	52	j1
PARAPET, HORIZ		25	j1	4	3240	51	4	3240	51	4	3190	50	4	3190	50	4	3190	50	j1
APRON, TRANS TOP		20	m1	4 (LENGTH VARIES)	2950 TO 3110	29	4 (LENGTH VARIES)	2950 TO 3110	29	4 (LENGTH VARIES)	2900 TO 3060	28	4 (LENGTH VARIES)	2900 TO 3060	28	4 (LENGTH VARIES)	2900 TO 3060	28	m1
APRON, TRANS TOP		20	m2	25 (LENGTH VARIES)	3180 TO 5820	265	19 (LENGTH VARIES)	3180 TO 5160	187	13 (LENGTH VARIES)	3130 TO 4450	116	10 (LENGTH VARIES)	3130 TO 4120	85	6 (LENGTH VARIES)	3130 TO 3680	48	m2
APRON, TRANS TOP		20	m3	4	4110	39	4	3710	35	4	3350	32	4	3150	30	4	3000	28	m3
APRON, TRANS BOT		20	m4	21 (LENGTH VARIES)	1070 TO 5160	154	17 (LENGTH VARIES)	1070 TO 4340	108	13 (LENGTH VARIES)	1070 TO 3530	70	11 (LENGTH VARIES)	1070 TO 3120	54	9 (LENGTH VARIES)	1070 TO 2710	40	m4
CURTAIN, HORIZ		20	p1	4	2730	26	4	2730	26	4	2730	26	4	2730	26	4	2730	26	p1
CURTAIN, HORIZ L		20	p2	4	7240	68	4	6030	57	4	4820	45	4	4220	40	4	3620	34	p2
CURTAIN, HORIZ S		20	p3	4	4170	39	4	3540	33	4	2920	28	4	2610	25	4	2290	22	p3
WING SLOPE EF L		20	s1	2	2890	14	2	2890	14	2	2890	14	2	2890	14	2	2890	14	s1
WING SLOPE EF S		20	s2	2	2510	12	2	2510	12	2	2510	12	2	2510	12	2	2510	12	s2
WING SLOPE EF L		20	s3	2	11 980	56	2	9410	44	2	6840	32	2	5550	26	2	4260	20	s3
WING SLOPE EF S		20	s4	2	9350	44	2	7380	35	2	5410	25	2	4430	21	2	3450	16	s4
WING SLOPE FF L		20	s5	1	14 120	33	1	11 550	27	1	8970	21	1	7690	18	1	6400	15	s5
WING SLOPE FF S		20	s6	1	10 940	26	1	8980	21	1	7010	17	1	6030	14	1	5040	12	s6
CURTAIN, VERT		15	t1	28	2260	99	23	2110	76	18	1960	55	16	1960	49	13	1960	40	t1
	REINF STEEL			2885 kg			2181 kg			1449 kg			1196 kg			945 kg			
ESTIMATED QUANTITIES ONE HEADWALL	CONC	PARAPET Δ		1.1			1.1			1.1			1.1			1.1			
		WINGS		11.7	33.8 m³		8.0	24.5 m³		4.4	16.0 m³		3.3	13.1 m³		2.2	10.3 m³		
		FOOTING		21.0			15.4			10.5			8.7			7.0			

NOTES: Δ INCLUDES TOP OF WINGWALL QUANTITIES.

ΔΔ SUBSCRIPT L DENOTES LONG WING.
SUBSCRIPT S DENOTES SHORT WING.

BENT BAR DETAILS

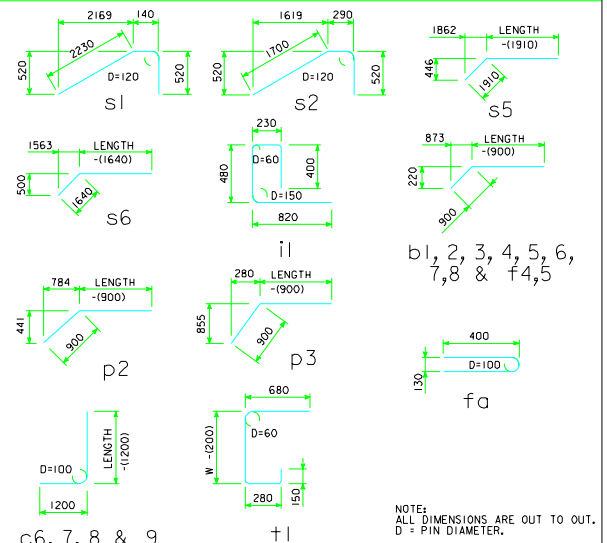

NOTE:
ALL DIMENSIONS ARE OUT TO OUT.
D = PIN DIAMETER.

HEADWALL NOTES:

THIS HEADWALL IS BASED ON A 3:1 SLOPE NORMAL TO CENTERLINE OF ROADWAY.

THE SIDES OF THE FOOTING ARE TO BE FORMED TO INSURE CORRECT LINE AND GRADE.

ALL EXPOSED CORNERS OF 90° OR SHARPER ARE TO BE FILLETED WITH A 20 mm DRESSED AND BEVELED STRIP.

ALL REINFORCING IS TO BE SECURELY WIRED IN PLACE BEFORE THE CONCRETE IS POURED. ALL SLAB AND FLOOR REINFORCING STEEL IS TO BE SUPPORTED BY BAR CHAIRS AT INTERVALS OF NOT MORE THAN 900 mm IN EITHER DIRECTION AS OUTLINED IN THE STANDARD SPECIFICATIONS.

CLEAR DISTANCE FROM FACE OF CONCRETE TO NEAR REINFORCING BAR IS TO BE 50 mm UNLESS OTHERWISE NOTED OR SHOWN. CLEARANCE TO THE BOTTOM ENDS OF VERTICAL BARS SHALL BE 75 mm.

CONCRETE QUANTITIES ARE ESTIMATED FROM BACK OF PARAPET.

HORIZONTAL TAILS OF BARS "b" & "s" ESTIMATED TO EXTEND 600 mm BEYOND BACK OF PARAPET (INTO END OF BARREL). LONGITUDINAL BARS "d", "f1", "f4" AND "f5" ESTIMATED TO PROJECT INTO END SECTION OF BARREL A MINIMUM OF 600 mm BEYOND BACK OF PARAPET.

THE "LENGTH" COLUMN REFLECTS TOTAL NUMBER OF MILLIMETERS NECESSARY TO MEET CLEARANCE REQUIREMENTS. "MASS" COLUMN INCLUDES AN ALLOWANCE OF 650 mm FOR LAP ON BARS THAT ARE OVER 12 000 mm LONG.

ALL DIMENSIONS ARE IN MILLIMETERS (mm) UNLESS OTHERWISE NOTED OR SHOWN.

NOTES:

1. SEE SHEET MRCB-G1-95 FOR GENERAL INFORMATION, SPECIFICATIONS, AND DESIGN STRESSES.

LATEST REVISION DATE : 04-02

APPROVED BY : William A. Kempeneer

STANDARD DESIGN

FLARED WING HEADWALLS

FOR
REINFORCED CONCRETE BOX CULVERTS

PROJECT DEVELOPMENT DIVISION
IOWA DEPARTMENT OF TRANSPORTATION

JULY, 1995

MFWH 30-3-95

REVISED 04-02 - CHANGED THE NUMBER OF d1 BARS FOR 2400 SPANS. CONCRETE QUANTITIES ADJUSTED.
FWH30M.S01

REVISED 1/98; BEND DIMENSIONS OF i1 BAR CHANGED.

XXXXXXXXXSYSTEMTIME XXXXXXXUSERNAME XXXXXXXXX