BILL OF REINFORCING FOR ONE HEADWALL 15° SKEW CULVERT SPAN X CULVERT HEIGHT

LOCATION ΔΔ	SHAPE	SIZE	MARK	1800×2400 NO.	1800×2400 LENGTH	1800×2400 MASS	1800×1800 NO.	1800×1800 LENGTH	1800×1800 MASS	1800×1500 NO.	1800×1500 LENGTH	1800×1500 MASS	1800×1200 NO.	1800×1200 LENGTH	1800×1200 MASS	1800×900 NO.	1800×900 LENGTH	1800×900 MASS	MARK
FENCE ANCHOR		15	fa	2	930	3	2	930	3	2	930	3	2	930	3	2	930	3	fa
WINGWALL, BFH L		15	b1	1	9430	15	1	7370	12	1	6340	10	1	5310	8	1	4280	7	b1
WINGWALL, BFH S		15	b2	1	8350	13	1	6550	10	1	5650	9	1	4750	7	1	3850	6	b2
WINGWALL BFH L		15	b3	6 (LENGTH VARIES)	3720 TO 8870	59	4 (LENGTH VARIES)	3720 TO 6810	33	3 (LENGTH VARIES)	3720 TO 5780	22	2 (LENGTH VARIES)	3720 TO 4750	18	1	3720	6	b3
WINGWALL BFH S		15	b4	6 (LENGTH VARIES)	3360 TO 7870	53	4 (LENGTH VARIES)	3360 TO 6070	30	3 (LENGTH VARIES)	3360 TO 5170	20	2 (LENGTH VARIES)	3360 TO 4270	12	1	3360	5	b4
WINGWALL FFH L		15	b5	1	9430	15	1	7370	12	1	6340	10	1	5310	8	1	4280	7	b5
WINGWALL FFH S		15	b6	1	8350	13	1	6550	10	1	5650	9	1	4750	7	1	3850	6	b6
WINGWALL FFH L		15	b7	7 (LENGTH VARIES)	2690 TO 8870	64	5 (LENGTH VARIES)	2690 TO 6810	37	4 (LENGTH VARIES)	2690 TO 5780	27	3 (LENGTH VARIES)	2690 TO 4750	18	2 (LENGTH VARIES)	2690 TO 3720	10	b7
WINGWALL FFH S		15	b8	7 (LENGTH VARIES)	2460 TO 7870	57	5 (LENGTH VARIES)	2460 TO 6070	33	4 (LENGTH VARIES)	2460 TO 5170	24	3 (LENGTH VARIES)	2460 TO 4270	16	2 (LENGTH VARIES)	2460 TO 3360	9	b8
WINGWALL FFV L		15	c1	29 (LENGTH VARIES)	770 TO 3220	91	22 (LENGTH VARIES)	770 TO 2610	58	18 (LENGTH VARIES)	770 TO 2260	43	15 (LENGTH VARIES)	770 TO 2000	33	12 (LENGTH VARIES)	770 TO 1730	24	c1
WINGWALL FFV S		15	c2	25 (LENGTH VARIES)	780 TO 3180	78	19 (LENGTH VARIES)	780 TO 2580	50	16 (LENGTH VARIES)	780 TO 2280	38	13 (LENGTH VARIES)	780 TO 1980	28	10 (LENGTH VARIES)	780 TO 1680	19	c2
WINGWALL FFV L		15	c3	2	3100	10	2	2500	8	2	2200	7	2	1900	6	2	1600	5	c3
WINGWALL FFV S		15	c3	1	3100	5	1	2500	4	1	2200	3	1	1900	3	1	1600	3	c3
WINGWALL BFV L		15	c4	9 (LENGTH VARIES)	770 TO 1470	16	9 (LENGTH VARIES)	770 TO 1470	16	9 (LENGTH VARIES)	770 TO 1470	16	9 (LENGTH VARIES)	770 TO 1470	16	9 (LENGTH VARIES)	770 TO 1470	16	c4
WINGWALL BFV S		15	c5	6 (LENGTH VARIES)	780 TO 1280	10	6 (LENGTH VARIES)	780 TO 1280	10	6 (LENGTH VARIES)	780 TO 1280	10	6 (LENGTH VARIES)	780 TO 1280	10	6 (LENGTH VARIES)	780 TO 1280	10	c5
WINGWALL BFV L		15	c6	20 (LENGTH VARIES)	2760 TO 4420	113	18 (LENGTH VARIES)	2760 TO 3810	67	9 (LENGTH VARIES)	2760 TO 3460	44	6 (LENGTH VARIES)	2760 TO 3200	28	3 (LENGTH VARIES)	2760 TO 2930	13	c6
WINGWALL BFV S		15	c7	19 (LENGTH VARIES)	2580 TO 4380	104	18 (LENGTH VARIES)	2580 TO 3780	65	10 (LENGTH VARIES)	2580 TO 3480	48	7 (LENGTH VARIES)	2580 TO 3180	32	4 (LENGTH VARIES)	2580 TO 2880	17	c7
WINGWALL BFV L		15	c8	10	3150	49	-----	-----	0	-----	-----	0	-----	-----	0	-----	-----	0	c8
WINGWALL BFV S		15	c8	7	3150	35	-----	-----	0	-----	-----	0	-----	-----	0	-----	-----	0	c8
WINGWALL BFV L		15	c9	2	4300	14	2	3700	12	2	3400	11	2	3100	10	2	2800	9	c9
WINGWALL BFV S		15	c9	1	4300	7	1	3700	6	1	3400	5	1	3100	5	1	2800	4	c9
APRON, LONG BOT		15	d1	5	5060	48	5	4810	38	5	4190	33	5	3570	28	5	2950	23	d1
APRON, LONG BOT L		15	d2	3	7980	38	3	5950	28	3	4950	23	3	3950	19	2	3840	12	d2
APRON, LONG BOT S		15	d3	3	7010	33	3	5240	25	3	4370	21	3	3500	16	2	3390	11	d3
APRON, LONG TOP		20	f1	6	5060	86	6	4810	68	6	4190	59	6	3570	50	6	2950	42	f1
APRON, LONG TOP L		20	f2	7 (LENGTH VARIES)	240 TO 4830	42	5 (LENGTH VARIES)	510 TO 3580	24	4 (LENGTH VARIES)	640 TO 2960	17	3 (LENGTH VARIES)	770 TO 2330	11	2 (LENGTH VARIES)	920 TO 1700	6	f2
APRON, LONG TOP S		20	f3	6 (LENGTH VARIES)	420 TO 4800	37	4 (LENGTH VARIES)	910 TO 3550	21	4 (LENGTH VARIES)	270 TO 2930	15	3 (LENGTH VARIES)	510 TO 2300	10	2 (LENGTH VARIES)	770 TO 1670	6	f3
APRON, LONG TOP L		20	f4	1	9430	22	1	7370	17	1	6340	15	1	5310	13	1	4280	10	f4
APRON, LONG TOP S		20	f5	1	8350	20	1	6550	15	1	5650	13	1	4750	11	1	3850	9	f5
PARAPET, VERT		15	j1	13	1880	38	18	1880	38	13	1880	38	13	1880	38	13	1880	38	j1
PARAPET, HORIZ		25	j1	4	2290	36	4	2240	35	4	2240	35	4	2240	35	4	2240	35	j1
APRON, TRANS TOP		20	m1	2 (LENGTH VARIES)	2220 TO 2280	11	2 (LENGTH VARIES)	2170 TO 2230	10	2 (LENGTH VARIES)	2170 TO 2230	10	2 (LENGTH VARIES)	2170 TO 2230	10	2 (LENGTH VARIES)	2170 TO 2230	10	m1
APRON, TRANS TOP		20	m2	20 (LENGTH VARIES)	2340 TO 4430	159	15 (LENGTH VARIES)	2290 TO 3830	108	12 (LENGTH VARIES)	2290 TO 3500	82	9 (LENGTH VARIES)	2290 TO 3170	58	7 (LENGTH VARIES)	2290 TO 2950	43	m2
APRON, TRANS TOP		20	m3	3	3150	22	3	2900	20	3	2690	19	3	2510	18	3	2340	17	m3
APRON, TRANS BOT		20	m4	17 (LENGTH VARIES)	390 TO 2970	67	18 (LENGTH VARIES)	390 TO 2330	42	10 (LENGTH VARIES)	550 TO 2000	30	9 (LENGTH VARIES)	390 TO 1680	22	7 (LENGTH VARIES)	390 TO 1360	14	m4
CURTAIN, HORIZ		20	p1	4	1840	17	4	1840	17	4	1840	17	4	1840	17	4	1840	17	p1
CURTAIN, HORIZ L		20	p2	4	4750	45	4	3840	36	4	3390	32	4	2940	28	4	2490	23	p2
CURTAIN, HORIZ S		20	p3	4	3730	35	4	3060	29	4	2730	26	4	2390	23	4	2060	19	p3
WING SLOPE EF L		20	s1	2	2580	12	2	2580	12	2	2580	12	2	2580	12	2	2580	12	s1
WING SLOPE EF S		20	s2	2	2430	11	2	2430	11	2	2430	11	2	2430	11	2	2430	11	s2
WING SLOPE EF L		20	s3	2	7950	37	2	5800	27	2	4730	22	2	3660	17	2	2590	12	s3
WING SLOPE EF S		20	s4	2	7130	34	2	5210	25	2	4290	20	2	3340	16	2	2390	11	s4
WING SLOPE FF L		20	s5	1	9780	23	1	7640	18	1	6540	15	1	5490	13	1	4420	10	s5
WING SLOPE FF S		20	s6	1	8750	21	1	6850	16	1	5900	14	1	4950	12	1	4000	9	s6
CURTAIN, VERT		15	t1	19	2110	63	15	1960	46	12	1960	37	11	1960	34	9	1960	28	t1
REINF STEEL				1781 kg			1202 kg			975 kg			785 kg			607 kg			
ESTIMATED QUANTITIES ONE HEADWALL	CONC	PARAPET Δ		0.9	20.0 m³		0.8	12.9 m³		0.8	10.4 m³		0.8	8.2 m³		0.8	6.2 m³		
		WING		7.1			3.9			2.9			2.0			1.2			
		FOOTING		12.0			8.2			6.7			5.4			4.2			

NOTES: Δ INCLUDES TOP OF WINGWALL QUANTITIES. ΔΔ SUBSCRIPT L DENOTES LONG WING. SUBSCRIPT S DENOTES SHORT WING.

BENT BAR DETAILS

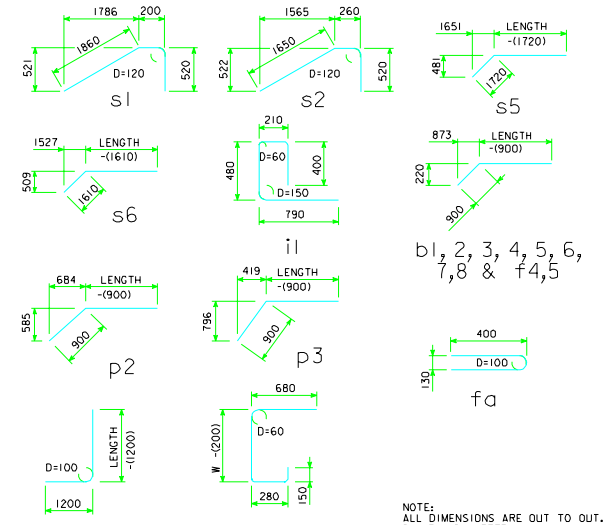

NOTE:
ALL DIMENSIONS ARE OUT TO OUT.
D = PIN DIAMETER.

HEADWALL NOTES:

THIS HEADWALL IS BASED ON A 3:1 SLOPE NORMAL TO CENTERLINE OF ROADWAY.

THE SIDES OF THE FOOTING ARE TO BE FORMED TO INSURE CORRECT LINE AND GRADE.

ALL EXPOSED CORNERS OF 90° OR SHARPER ARE TO BE FILLETED WITH A 20 mm DRESSED AND BEVELED STRIP.

ALL REINFORCING IS TO BE SECURELY WIRED IN PLACE BEFORE THE CONCRETE IS POURED. ALL SLAB AND FLOOR REINFORCING STEEL IS TO BE SUPPORTED BY BAR CHAIRS AT INTERVALS OF NOT MORE THAN 900 mm IN EITHER DIRECTION AS OUTLINED IN THE STANDARD SPECIFICATIONS.

CLEAR DISTANCE FROM FACE OF CONCRETE TO NEAR REINFORCING BAR IS TO BE 50 mm UNLESS OTHERWISE NOTED OR SHOWN. CLEARANCE TO THE BOTTOM ENDS OF VERTICAL BARS SHALL BE 75 mm.

CONCRETE QUANTITIES ARE ESTIMATED FROM BACK OF PARAPET.

HORIZONTAL TAILS OF BARS "b" & "s" ESTIMATED TO EXTEND 600 mm BEYOND BACK OF PARAPET (INTO END OF BARREL). LONGITUDINAL BARS "d", "f1", "f4" AND "f5" ESTIMATED TO PROJECT INTO END SECTION OF BARREL A MINIMUM OF 600 mm BEYOND BACK OF PARAPET.

THE "LENGTH" COLUMN REFLECTS TOTAL NUMBER OF MILLIMETERS NECESSARY TO MEET CLEARANCE REQUIREMENTS. "MASS" COLUMN INCLUDES AN ALLOWANCE OF 650 mm FOR LAP ON BARS THAT ARE OVER 12 000 mm LONG.

ALL DIMENSIONS ARE IN MILLIMETERS (mm) UNLESS OTHERWISE NOTED OR SHOWN.

NOTES:

1. SEE SHEET MRCB-G1-95 FOR GENERAL INFORMATION, SPECIFICATIONS, AND DESIGN STRESSES.

LATEST REVISION DATE : 04-02

APPROVED BY : William A. Kneppmann

STANDARD DESIGN

FLARED WING HEADWALLS

FOR
REINFORCED CONCRETE BOX CULVERTS

PROJECT DEVELOPMENT DIVISION
IOWA DEPARTMENT OF TRANSPORTATION

JULY, 1995

MFWH 15-4-95

REVISED 04-02 - CHANGED THE NUMBER OF d1 BARS FOR 2400 SPANS. CONCRETE QUANTITIES ADJUSTED.
FWH15M.S01

REVISED 1/98; BEND DIMENSIONS OF i1 BAR CHANGED.

XXXXXXXXXXSYSTEMTIME XXXXXXXUSERNAME XXXXXXXXXX