BILL OF REINFORCING FOR ONE HEADWALL 45° SKEW CULVERT SPAN x CULVERT HEIGHT

BAR	LOCATION	SHAPE	12' x 12' NO.	12' x 12' LENGTH	12' x 12' WT.	12' x 11' NO.	12' x 11' LENGTH	12' x 11' WT.	12' x 10' NO.	12' x 10' LENGTH	12' x 10' WT.	12' x 9' NO.	12' x 9' LENGTH	12' x 9' WT.	12' x 8' NO.	12' x 8' LENGTH	12' x 8' WT.	12' x 7' NO.	12' x 7' LENGTH	12' x 7' WT.	12' x 6' NO.	12' x 6' LENGTH	12' x 6' WT.	BAR
5fa	FENCE ANCHOR (GALV.)		2	2'-10	6	2	2'-10	6	2	2'-10	6	2	2'-10	6	2	2'-10	6	2	2'-10	6	2	2'-10	6	5fa
4b1	WINGWALL, B.F.H. LONG		1	74'-8	51	1	68'-10	47	1	63'-0	44	1	57'-2	40	1	51'-4	36	1	45'-6	32	1	39'-8	26	4b1
4b2	WINGWALL, B.F.H. SHORT		1	45'-10	32	1	42'-4	30	1	38'-10	26	1	35'-5	24	1	31'-11	21	1	28'-5	19	1	24'-11	17	4b2
4b3	WINGWALL, B.F.H. LONG		10 VAR.	19'-6 TO 71'-10	314	9 VAR.	19'-6 TO 66'-1	265	8 VAR.	19'-6 TO 60'-3	219	7 VAR.	19'-6 TO 54'-5	177	6 VAR.	19'-6 TO 48'-7	139	5 VAR.	19'-6 TO 42'-9	105	4 VAR.	19'-5 TO 36'-11	75	4b3
4b4	WINGWALL, B.F.H. SHORT		10 VAR.	12'-10 TO 44'-3	194	9 VAR.	12'-10 TO 40'-9	163	8 VAR.	12'-10 TO 37'-3	134	7 VAR.	12'-10 TO 33'-9	109	6 VAR.	12'-10 TO 30'-3	86	5 VAR.	12'-10 TO 26'-9	66	4 VAR.	12'-10 TO 23'-3	48	4b4
5b5	WINGWALL, F.F.H. LONG		1	74'-8	80	1	68'-10	74	1	63'-0	68	1	57'-2	62	1	51'-4	56	1	45'-6	50	1	39'-9	41	5b5
5b6	WINGWALL, F.F.H. SHORT		1	45'-11	50	1	42'-5	47	1	38'-11	41	1	35'-5	37	1	31'-11	33	1	28'-5	30	1	24'-11	26	5b6
5b7	WINGWALL, F.F.H. LONG		11 VAR.	13'-9 TO 71'-11	506	10 VAR.	13'-9 TO 66'-1	428	9 VAR.	13'-9 TO 60'-3	357	8 VAR.	13'-9 TO 54'-5	291	7 VAR.	13'-8 TO 48'-7	232	6 VAR.	13'-8 TO 42'-9	179	5 VAR.	13'-8 TO 36'-11	132	5b7
5b8	WINGWALL, F.F.H. SHORT		11 VAR.	9'-5 TO 44'-4	313	10 VAR.	9'-5 TO 40'-10	264	9 VAR.	9'-5 TO 37'-4	219	8 VAR.	9'-5 TO 33'-10	180	7 VAR.	9'-5 TO 30'-4	145	6 VAR.	9'-4 TO 26'-10	113	5 VAR.	9'-4 TO 23'-4	85	5b8
5b9	INTERIOR WALLS, BOTH F.H.		42 VAR.	2 EA. 6'-6 TO 37'-4	960	38 VAR.	2 EA. 6'-6 TO 34'-6	812	34 VAR.	2 EA. 6'-6 TO 31'-9	678	30 VAR.	2 EA. 6'-6 TO 28'-11	554	26 VAR.	2 EA. 6'-7 TO 26'-1	443	22 VAR.	2 EA. 6'-7 TO 23'-3	342	18 VAR.	2 EA. 6'-8 TO 20'-5	254	5b9
4c1	WINGWALL, F.F.V. LONG		72 VAR.	2'-9 TO 15'-0	427	66 VAR.	2'-9 TO 13'-11	367	60 VAR.	2'-9 TO 12'-11	314	54 VAR.	2'-9 TO 11'-11	265	49 VAR.	2'-9 TO 11'-0	225	43 VAR.	2'-9 TO 10'-0	183	37 VAR.	2'-9 TO 9'-0	145	4c1
4c2	WINGWALL, F.F.V. SHORT		43 VAR.	2'-10 TO 14'-10	254	40 VAR.	2'-10 TO 14'-0	225	36 VAR.	2'-10 TO 12'-10	188	33 VAR.	2'-10 TO 12'-0	163	29 VAR.	2'-10 TO 10'-10	132	26 VAR.	2'-10 TO 10'-0	111	22 VAR.	2'-10 TO 8'-10	86	4c2
4c3	WINGWALL, F.F.V. LONG		33 VAR.	6'-10 TO 12'-4	211	27 VAR.	6'-10 TO 11'-3	163	21 VAR.	6'-10 TO 10'-3	120	15 VAR.	6'-10 TO 9'-3	81	---	---	---	---	---	---	---	---	---	4c3
4c4	WINGWALL, F.F.V. SHORT		20 VAR.	8'-8 TO 14'-2	153	17 VAR.	8'-8 TO 13'-3	124	13 VAR.	8'-8 TO 12'-2	90	10 VAR.	8'-8 TO 11'-3	67	---	---	---	---	---	---	---	---	---	4c4
4c5	WINGWALL, F.F.V. LONG		1	13'-9	9	2	12'-9	17	2	11'-9	16	2	10'-9	14	1	9'-9	7	1	8'-9	6	1	7'-9	5	4c5
4c5	WINGWALL, F.F.V. SHORT		2	13'-9	18	1	12'-9	9	2	11'-9	16	1	10'-9	7	2	9'-9	13	1	8'-9	6	2	7'-9	10	4c5
4c6	INTERIOR WALLS, BOTH F.V.		4	1'-8	4	4	1'-8	4	4	1'-8	4	4	1'-8	4	4	1'-8	4	4	1'-8	4	4	1'-8	4	4c6
4c7	INTERIOR WALLS, BOTH F.V.		132 VAR.	2 EA. 1'-10 TO 12'-5	628	122 VAR.	2 EA. 1'-10 TO 11'-6	543	110 VAR.	2 EA. 1'-10 TO 10'-5	450	100 VAR.	2 EA. 1'-10 TO 9'-6	379	88 VAR.	2 EA. 1'-10 TO 8'-6	304	76 VAR.	2 EA. 1'-10 TO 7'-5	235	66 VAR.	2 EA. 1'-10 TO 6'-6	184	4c7
4c8	INTERIOR WALLS, BOTH F.V.		6	12'-7	50	6	11'-7	46	6	10'-7	42	6	9'-7	38	6	8'-7	34	6	7'-7	30	6	6'-7	26	4c8
5c9	WINGWALL, B.F.V. LONG		15 VAR.	2'-9 TO 5'-2	62	15 VAR.	2'-9 TO 5'-2	62	15 VAR.	2'-9 TO 5'-2	62	15 VAR.	2'-9 TO 5'-2	62	15 VAR.	2'-9 TO 5'-2	62	15 VAR.	2'-9 TO 5'-2	62	15 VAR.	2'-9 TO 5'-2	62	5c9
5c10	WINGWALL, B.F.V. SHORT		4 VAR.	2'-10 TO 3'-8	14	4 VAR.	2'-10 TO 3'-8	14	4 VAR.	2'-10 TO 3'-8	14	4 VAR.	2'-10 TO 3'-8	14	4 VAR.	2'-10 TO 3'-8	14	4 VAR.	2'-10 TO 3'-8	14	4 VAR.	2'-10 TO 3'-8	14	5c10
5c11	WINGWALL, B.F.V. LONG		57 VAR.	9'-4 TO 19'-0	842	51 VAR.	9'-4 TO 17'-11	725	45 VAR.	9'-4 TO 16'-11	616	39 VAR.	9'-4 TO 15'-11	514	34 VAR.	9'-4 TO 15'-0	431	28 VAR.	9'-4 TO 14'-0	341	22 VAR.	9'-4 TO 13'-0	256	5c11
5c12	WINGWALL, B.F.V. SHORT		39 VAR.	8'-0 TO 18'-10	546	36 VAR.	8'-0 TO 18'-0	488	32 VAR.	8'-0 TO 16'-10	414	29 VAR.	8'-0 TO 16'-0	363	25 VAR.	8'-0 TO 14'-10	298	22 VAR.	8'-0 TO 14'-0	252	18 VAR.	8'-0 TO 12'-10	196	5c12
6c13	WINGWALL, B.F.V. LONG		47	10'-6	741	41	10'-6	647	35	10'-6	552	29	10'-6	457	24	10'-6	379	18	10'-6	284	12	10'-6	189	6c13
6c13	WINGWALL, B.F.V. SHORT		28	10'-6	442	25	10'-6	394	21	10'-6	331	18	10'-6	284	14	10'-6	221	11	10'-6	173	7	10'-6	110	6c13
5c14	WINGWALL, B.F.V. LONG		1	17'-9	19	2	16'-9	35	2	15'-9	33	2	14'-9	31	1	13'-9	14	1	12'-9	13	1	11'-9	12	5c14
5c14	WINGWALL, B.F.V. SHORT		2	17'-9	37	1	16'-9	17	2	15'-9	33	1	14'-9	15	2	13'-9	29	1	12'-9	13	2	11'-9	25	5c14
4d1	APRON, LONGIT., BOTT.		25	38'-1	636	25	35'-3	589	25	32'-5	541	25	29'-7	494	25	26'-9	447	25	24'-0	401	25	21'-2	353	4d1
4d2	APRON, LONGIT., BOTT. LONG		3	68'-5	142	3	62'-7	130	3	56'-8	118	3	50'-10	106	3	45'-0	95	3	39'-3	79	3	33'-6	67	4d2
4d3	APRON, LONGIT., BOTT. SHORT		3	42'-2	89	3	38'-8	77	3	35'-1	70	3	31'-7	63	3	28'-2	56	3	24'-8	49	3	21'-3	43	4d3
6f1	APRON, LONGIT., TOP		37	38'-1	2116	37	35'-3	1959	37	32'-5	1802	37	29'-7	1644	37	26'-9	1487	37	24'-0	1334	37	21'-2	1176	6f1
6f2	APRON, LONGIT., TOP LONG		15 VAR.	6'-6 TO 34'-10	466	14 VAR.	5'-8 TO 32'-0	396	12 VAR.	6'-11 TO 29'-2	325	11 VAR.	6'-1 TO 26'-4	268	9 VAR.	7'-3 TO 23'-6	208	8 VAR.	6'-5 TO 20'-8	163	7 VAR.	5'-7 TO 17'-10	123	6f2
6f3	APRON, LONGIT., TOP SHORT		9 VAR.	8'-1 TO 35'-2	292	8 VAR.	8'-8 TO 32'-4	246	8 VAR.	5'-9 TO 29'-6	212	7 VAR.	6'-4 TO 26'-8	173	6 VAR.	6'-10 TO 23'-10	138	5 VAR.	7'-4 TO 21'-0	106	4 VAR.	7'-11 TO 18'-2	78	6f3
6f4	APRON, LONGIT., TOP LONG		1	74'-8	116	1	68'-10	107	1	63'-0	98	1	57'-2	89	1	51'-4	80	1	45'-6	72	1	39'-9	60	6f4
6f5	APRON, LONGIT., TOP SHORT		1	45'-11	72	1	42'-5	67	1	38'-11	58	1	35'-5	53	1	31'-11	48	1	28'-5	43	1	24'-11	37	6f5
4l1	PARAPET, VERTICAL		77	6'-8	343	75	6'-8	334	75	6'-8	334	75	6'-8	334	75	6'-8	334	75	6'-8	334	75	6'-8	334	4l1
7j1	PARAPET, HORIZONTAL		4	56'-1	477	4	55'-7	473	4	55'-1	469	4	55'-1	469	4	55'-1	469	4	54'-8	465	4	54'-8	465	7j1
6m1	APRON, TRANS., TOP		23 VAR.	44'-8 TO 48'-9	1691	20 VAR.	44'-3 TO 47'-10	1451	16 VAR.	43'-11 TO 46'-9	1144	12 VAR.	43'-11 TO 46'-0	851	9 VAR.	43'-11 TO 45'-5	634	5 VAR.	43'-7 TO 44'-4	347	1 VAR.	43'-7 TO 43'-7	69	6m1
6m2	APRON, TRANS., TOP		4 VAR.	36'-3 TO 38'-6	225	7 VAR.	33'-3 TO 37'-9	373	11 VAR.	30'-3 TO 37'-9	562	15 VAR.	27'-5 TO 37'-11	736	18 VAR.	24'-7 TO 37'-4	837	22 VAR.	21'-8 TO 37'-5	976	26 VAR.	18'-10 TO 37'-7	1102	6m2
6m3	APRON, TRANS., TOP		46 VAR.	10'-3 TO 35'-7	1583	42 VAR.	9'-7 TO 32'-7	1330	39 VAR.	8'-3 TO 29'-8	1111	35 VAR.	7'-8 TO 26'-10	907	31 VAR.	7'-1 TO 24'-0	724	27 VAR.	6'-5 TO 21'-0	556	23 VAR.	5'-10 TO 18'-2	415	6m3
6m4	APRON, TRANS., BOTT.		24 VAR.	47'-4 TO 71'-10	2229	22 VAR.	47'-1 TO 69'-6	2001	20 VAR.	46'-10 TO 67'-1	1779	18 VAR.	46'-10 TO 65'-0	1573	16 VAR.	46'-10 TO 62'-10	1372	14 VAR.	46'-7 TO 60'-6	1173	12 VAR.	46'-7 TO 58'-4	986	6m4
6p1	CURTAIN, HORIZONTAL		4	53'-8	336	4	53'-6	335	4	53'-3	333	4	53'-3	333	4	53'-3	333	4	53'-0	332	4	52'-11	331	6p1
6p2	CURTAIN, HORIZONTAL LONG		4	42'-4	268	4	39'-2	235	4	36'-0	216	4	32'-10	197	4	29'-8	178	4	26'-6	159	4	23'-4	140	6p1
6p3	CURTAIN, HORIZONTAL SHORT		4	15'-8	94	4	14'-7	88	4	13'-7	82	4	12'-7	76	4	11'-7	70	4	10'-7	64	4	9'-6	57	6p2
6s1	WING SLOPE, BOTH F. LONG		2	8'-4	25	2	8'-4	25	2	8'-4	25	2	8'-4	25	2	8'-4	25	2	8'-4	25	2	8'-4	25	6s1
6s2	WING SLOPE, BOTH F. SHORT		2	7'-11	24	2	7'-11	24	2	7'-11	24	2	7'-11	24	2	7'-11	24	2	7'-11	24	2	7'-11	24	6s2
6s3	WING SLOPE, BOTH F. LONG		2	69'-0	214	2	63'-1	196	2	57'-2	178	2	51'-3	161	2	45'-4	143	2	39'-5	118	2	33'-6	101	6s3
6s4	WING SLOPE, BOTH F. SHORT		2	42'-1	133	2	38'-6	116	2	34'-10	105	2	31'-2	94	2	27'-7	83	2	23'-11	72	2	20'-3	61	6s4
6s5	WING SLOPE, F.F. LONG		1	74'-3	115	1	68'-4	106	1	62'-5	97	1	56'-6	88	1	50'-7	79	1	44'-8	70	1	38'-9	58	6s5
6s6	WING SLOPE, F.F. SHORT		1	47'-1	74	1	43'-5	69	1	39'-10	60	1	36'-2	54	1	32'-6	49	1	28'-11	43	1	25'-3	38	6s6
6s7	INTERIOR WALLS, BOTH F.H.		4	38'-8	232	4	35'-9	215	4	32'-10	197	4	29'-10	179	4	26'-10	161	4	23'-11	144	4	20'-11	126	6s7
5t1	CURTAIN, VERTICAL		77	7'-11	636	74	7'-8	592	69	7'-5	534	66	7'-2	493	62	6'-11	447	59	6'-8	410	55	6'-5	368	5t1
ESTIMATED QUANTITIES ONE HEADWALL	REINF. STEEL			19,591 LB			17,550 LB			15,561 LB			13,722 LB			11,885 LB			10,228 LB			8671 LB		
	CONCRETE	PARAPET Δ	5.4			5.3			5.2			5.2			5.2			5.1			5.1			
		WINGWALLS	50.5	172.5 CY		39.6	149.0 CY		30.3	127.7 CY		25.2	112.0 CY		20.4	97.0 CY		14.6	80.9 CY		11.1	68.2 CY		
		FOOTING *	116.6			104.1			92.2			81.6			71.4			61.2			52.0			

BENT BAR DETAILS

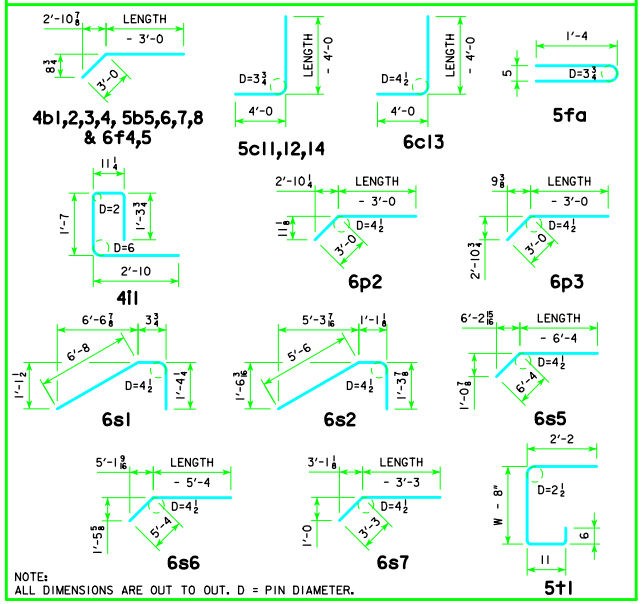

NOTE:
ALL DIMENSIONS ARE OUT TO OUT. D = PIN DIAMETER.

Δ INCLUDES TOP OF WINGWALL QUANTITIES.
* ASSUMES APRON AND FLOOR ARE EQUAL THICKNESS, ADJUST CONCRETE QUANTITIES FOR TRANSITION WHERE APRON AND FLOOR THICKNESS ARE NOT EQUAL.

NOTE:
WEIGHT OF BARS OVER 40'-0 LONG INCLUDES AN ALLOWANCE OF 2'-3 FOR LAP.
LENGTHS SHOWN FOR BARS OVER 40'-0 LONG DO NOT INCLUDE LAP.

"SHORT" DENOTES SHORT WINGWALL
"LONG" DENOTES LONG WINGWALL

HEADWALL NOTES:

1. SEE DRAWING TRRCB G1-12 FOR GENERAL INFORMATION, SPECIFICATIONS, AND DESIGN STRESSES.
2. THIS HEADWALL IS BASED ON A 3:1 SLOPE NORMAL TO CENTERLINE OF ROADWAY.
3. THE SIDES OF THE FOOTING ARE TO BE FORMED TO INSURE CORRECT LINE AND GRADE.
4. ALL SLAB AND FLOOR REINFORCING STEEL IS TO BE SUPPORTED BY BAR CHAIRS AT INTERVALS OF NOT MORE THAN 3'-0 IN EITHER DIRECTION AS OUTLINED IN THE STANDARD SPECIFICATIONS.
5. CLEAR DISTANCE FROM FACE OF CONCRETE TO NEAR REINFORCING BAR IS TO BE 2" UNLESS OTHERWISE NOTED OR SHOWN. CLEARANCE TO THE BOTTOM ENDS OF VERTICAL BARS SHALL BE 3 INCHES.
6. CONCRETE QUANTITIES ARE ESTIMATED FROM BACK OF PARAPET.
7. HORIZONTAL TAILS OF BARS "b" & "s" ESTIMATED TO EXTEND 2'-0 BEYOND BACK OF PARAPET (INTO END OF BARREL). LONGITUDINAL BARS "d", "6f1", AND "6f3" ESTIMATED TO PROJECT INTO END SECTION OF BARREL A MINIMUM OF 2'-0 BEYOND BACK OF PARAPET.
8. THE "LENGTH" COLUMN REFLECTS TOTAL NUMBER OF FEET NECESSARY TO MEET THESE REQUIREMENTS.

LATEST REVISION DATE

APPROVED BY BRIDGE ENGINEER

Iowa Department of Transportation
Highway Division

STANDARD DESIGN

TRIPLE REINFORCED CONCRETE BOX CULVERTS

APRIL, 2012

FLARED WING HEADWALLS

45° SKEW

TRH 45-7-12

ENGLISHLRFDSIGNEDTRIPLECULVERTS.DGN - TRH 45-7-12 - THIS SHEET ISSUED 04-12.