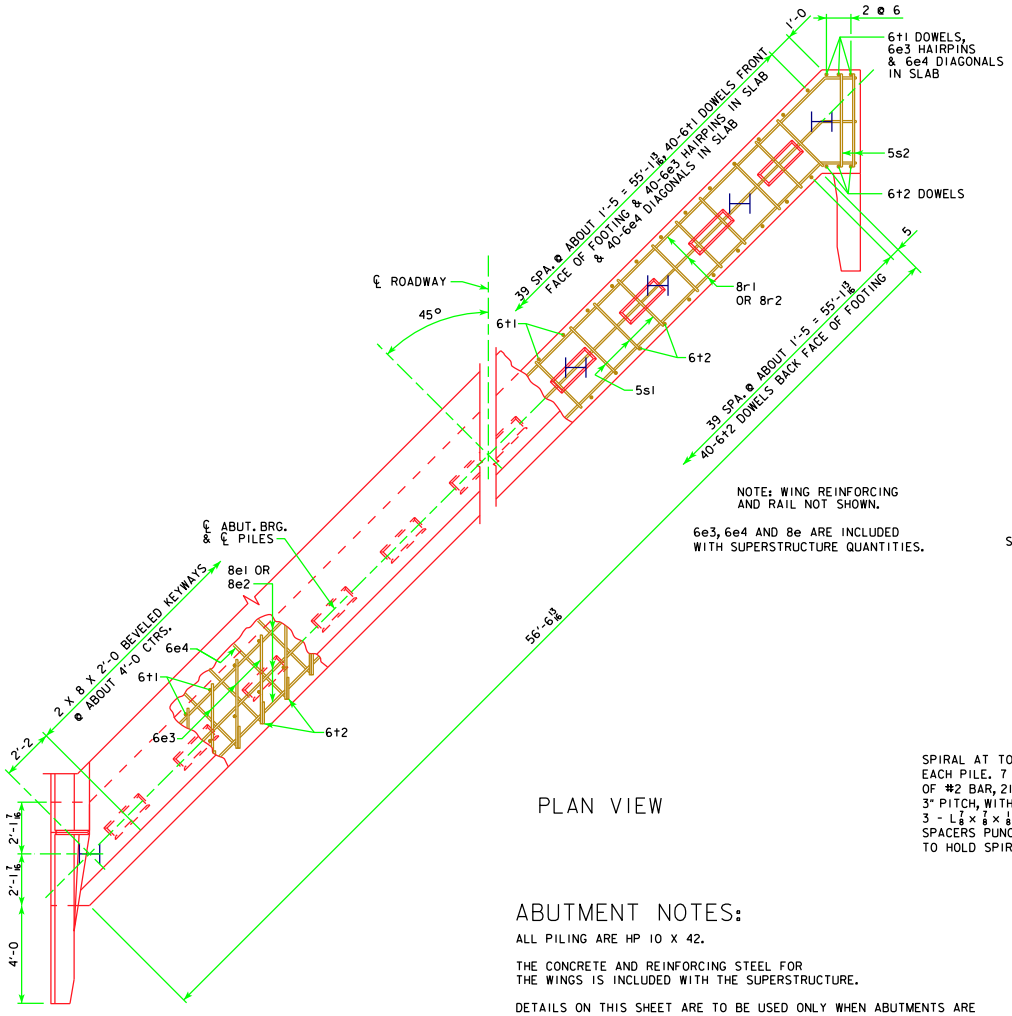

NOTE: WING REINFORCING AND RAIL NOT SHOWN.

6e3, 6e4 AND 8e ARE INCLUDED WITH SUPERSTRUCTURE QUANTITIES.

PLAN VIEW

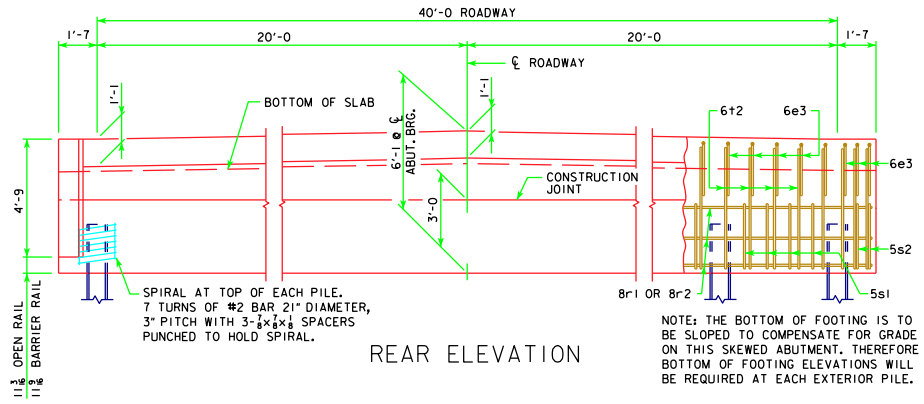

REAR ELEVATION

NOTE: THE BOTTOM OF FOOTING IS TO BE SLOPED TO COMPENSATE FOR GRADE ON THIS SKEWED ABUTMENT. THEREFORE BOTTOM OF FOOTING ELEVATIONS WILL BE REQUIRED AT EACH EXTERIOR PILE.

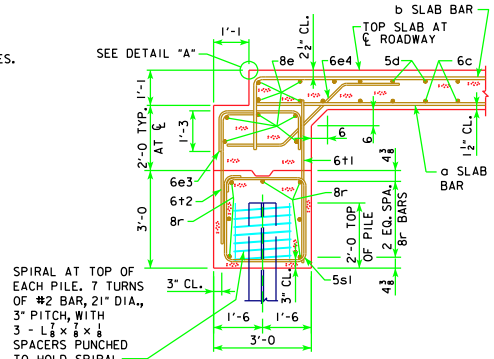

SECTION NORMAL TO ABUTMENT AT ℄

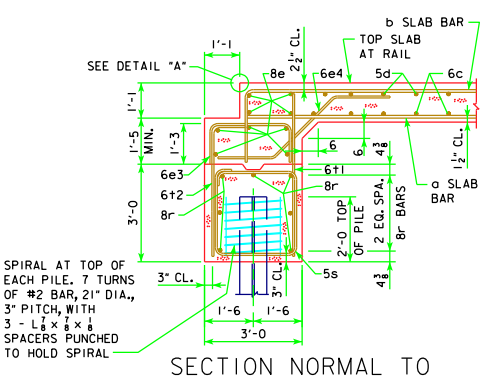

SECTION NORMAL TO ABUTMENT AT GUTTERLINE

ABUTMENT NOTES:

ALL PILING ARE HP 10 X 42.

THE CONCRETE AND REINFORCING STEEL FOR THE WINGS IS INCLUDED WITH THE SUPERSTRUCTURE.

DETAILS ON THIS SHEET ARE TO BE USED ONLY WHEN ABUTMENTS ARE PLACED ON STEEL PILES. IF ROCK IS ENCOUNTERED CLOSER THAN 12' BELOW ABUTMENT FOOTING, SPECIAL ANALYSIS MAY BE REQUIRED.

THE MINIMUM CLEAR DISTANCE FROM THE FACE OF THE CONCRETE TO NEAR REINFORCING BAR IS TO BE 2 INCHES UNLESS OTHERWISE NOTED OR SHOWN.

STEEL PILING USED AS FRICTION PILE SHALL BE DRIVEN TO FULL PENETRATION IF PRACTICABLE BUT IN NO CASE TO A BEARING VALUE LESS THAN THE PILE BEARING REQUIRED FOR EACH BRIDGE LENGTH AS SHOWN ON SHEET J40-43-06.

ALL REINFORCING STEEL IS TO BE GRADE 60.

ABUTMENT PILING WAS DESIGNED FOR HL-93 LOADING WITH AN ALLOWANCE FOR 20 LBS. PER SQ. FT. FUTURE WEARING SURFACE.

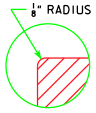

DETAIL "A"

11-08 LATEST REVISION DATE	APPROVED BY BRIDGE ENGINEER	Iowa Department of Transportation Highway Division
		STANDARD DESIGN - 40' ROADWAY, 3 SPAN BRIDGES CONTINUOUS CONCRETE SLAB BRIDGES NOVEMBER, 2006
		ABUTMENT DETAILS 45° SKEW - STEEL PILING
		J40-42-06

REVISED 11-08 - REVISED SHEET FOR NEW PAVING NOTCH & WING. DESIGN FOR HL-93 LOADING.