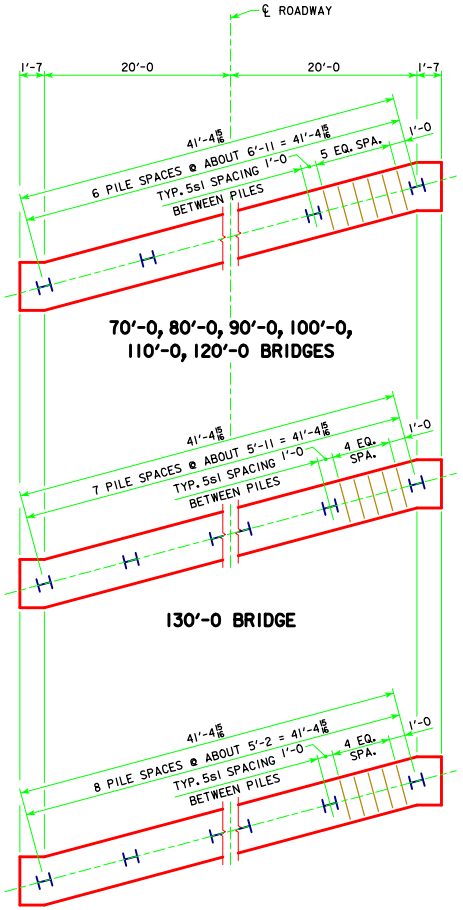

PILE PLAN - 15° SKEW
STEEL PILING

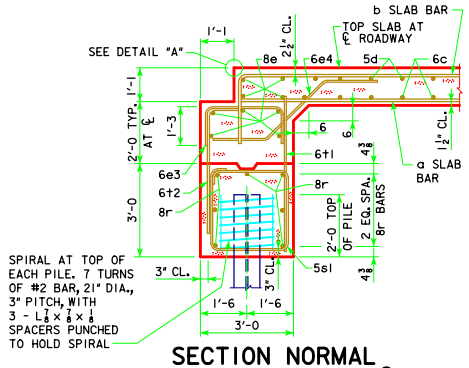

SECTION NORMAL
TO ABUTMENT AT ℄

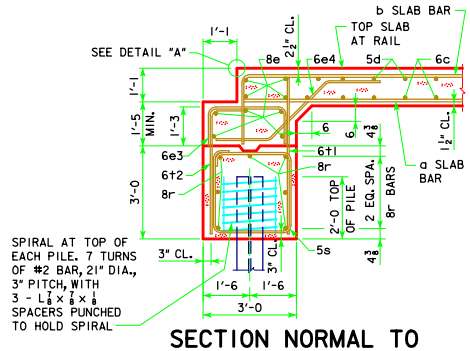

SECTION NORMAL TO
ABUTMENT AT GUTTERLINE

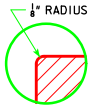

DETAIL "A"

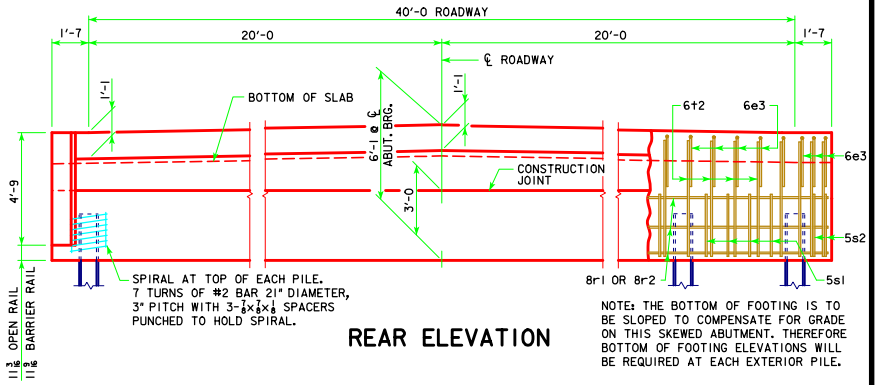

REAR ELEVATION

NOTE: THE BOTTOM OF FOOTING IS TO BE SLOPED TO COMPENSATE FOR GRADE ON THIS SKEWED ABUTMENT. THEREFORE BOTTOM OF FOOTING ELEVATIONS WILL BE REQUIRED AT EACH EXTERIOR PILE.

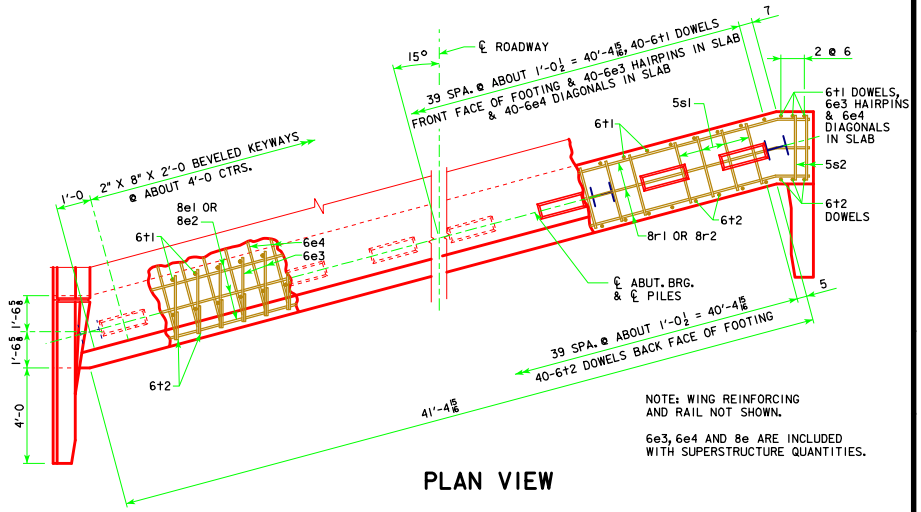

PLAN VIEW

NOTE: WING REINFORCING AND RAIL NOT SHOWN.

6e3, 6e4 AND 8e ARE INCLUDED WITH SUPERSTRUCTURE QUANTITIES.

ABUTMENT NOTES:

ALL PILING ARE HP 10 X 42.

THE CONCRETE AND REINFORCING STEEL FOR THE WINGS IS INCLUDED WITH THE SUPERSTRUCTURE.

DETAILS ON THIS SHEET ARE TO BE USED ONLY WHEN ABUTMENTS ARE PLACED ON STEEL PILES. IF ROCK IS ENCOUNTERED CLOSER THAN 12' BELOW ABUTMENT FOOTING, SPECIAL ANALYSIS MAY BE REQUIRED.

THE MINIMUM CLEAR DISTANCE FROM THE FACE OF THE CONCRETE TO NEAR REINFORCING BAR IS TO BE 2 INCHES UNLESS OTHERWISE NOTED OR SHOWN.

STEEL ABUTMENT PILES SHALL BE DRIVEN TO FULL PENETRATION IF PRACTICABLE BUT IN NO CASE TO A BEARING VALUE LESS THAN SHOWN IN DESIGN PLANS.

ALL REINFORCING STEEL IS TO BE GRADE 60.

ABUTMENT PILING WAS DESIGNED FOR HL-93 LOADING WITH AN ALLOWANCE FOR 20 LBS. PER SQ.FT. FUTURE WEARING SURFACE.

NUMBER OF PILES AND ABUTMENT DESIGN LOADS

BRIDGE LENGTH	70'-0	80'-0	90'-0	100'-0	110'-0	120'-0	130'-0	140'-0	150'-0
PILING - NUMBER	7	7	7	7	7	7	8	9	9
PU, STRENGTH I DESIGN LOAD - KIPS	488	520	550	590	627	671	713	Δ 835	Δ 884

Δ INCLUDES DYNAMIC LOAD ALLOWANCE
NOTE: PU, STRENGTH I DESIGN LOAD (KIPS) IS NOT THE VALUE USED IN THE FIELD FOR DRIVING PILES.

06-13
LATEST REVISION DATE

APPROVED BY BRIDGE ENGINEER

Iowa Department of Transportation
Highway Division

STANDARD DESIGN - 40' ROADWAY, 3 SPAN BRIDGES
CONTINUOUS CONCRETE SLAB BRIDGES
NOVEMBER, 2006

ABUTMENT DETAILS
15° SKEW - STEEL PILING

J40-40-06

REVISED 06-13 - REVISION FOR LRFD PILE DESIGN.