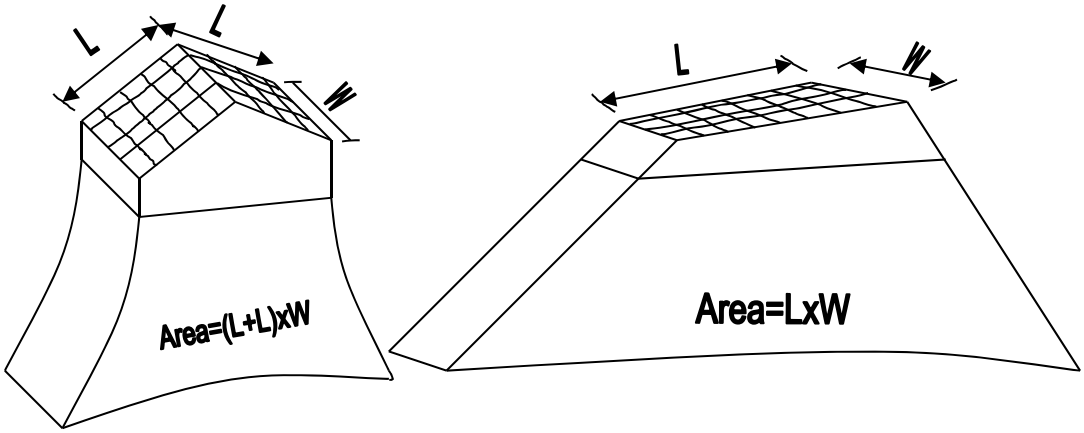
L
L
W
Area=(L+L)xW
L
W
Area=LxW