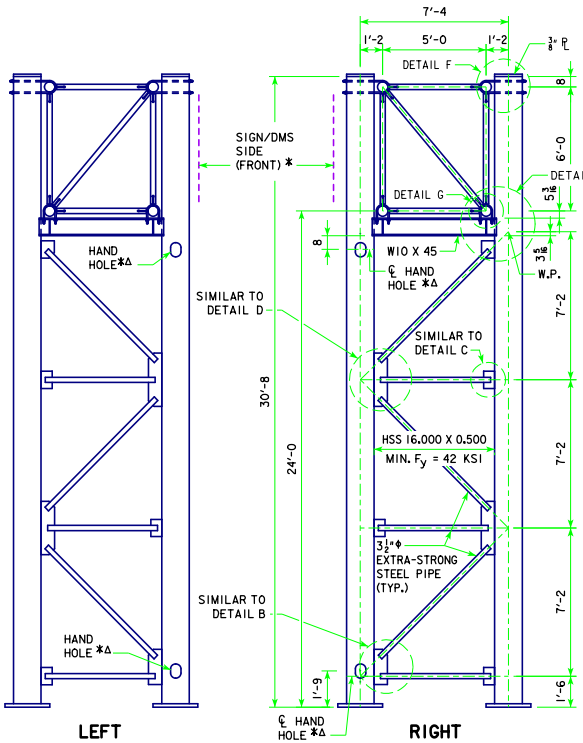

END VIEW OF TRUSS SUPPORTS

Δ - HAND HOLES SHALL BE LOCATED ONLY IN POSTS THAT ARE CLOSEST TO DYNAMIC MESSAGE SIGN AND BE POSITIONED ON SIDE OPPOSITE TRAFFIC

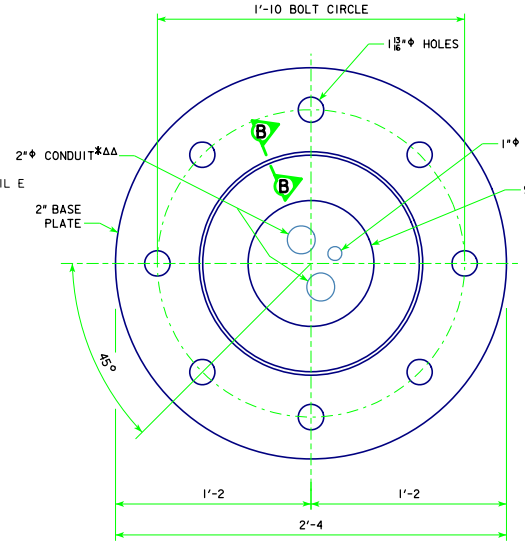

BASE PLATE PLAN

ΔΔ - CONDUITS ARE PRESENT ONLY IN POSTS WITH HAND HOLES

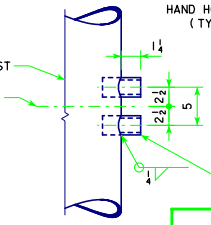

ELECTRICAL INLET *

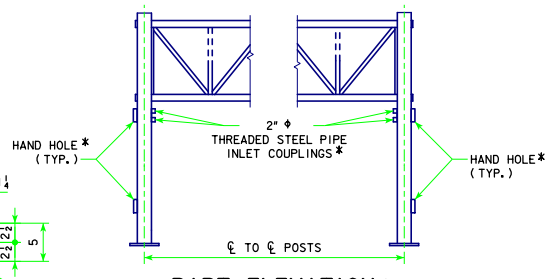

PART ELEVATION *

*FOR DMS TRUSSES ONLY

HAND HOLES, CONDUIT, AND PIPE INLET COUPLINGS ARE TO BE INCLUDED ON DMS TRUSS DESIGNS ONLY. SEE STANDARD SHEET SOST-18-11 FOR FOUNDATION CONDUIT LOCATION DETAILS.

HAND HOLES AND ELECTRICAL INLET HOLES SHALL BE LOCATED IN BOTH TRUSS SUPPORTS UNLESS OTHERWISE INDICATED ON DETAIL PROJECT PLANS. LOCATE HOLES ONLY IN POSTS THAT ARE CLOSEST TO DYNAMIC MESSAGE SIGN.

THREADED STEEL PIPE INLET COUPLINGS ARE TO BE PLACED OPPOSITE TO UPPER HAND HOLE ON POST. COUPLINGS SHALL BE FITTED WITH STANDARD PLUGS UNTIL CONDUIT IS INSTALLED.

ALL CONDUIT SHALL BE SCHEDULE 40 PLASTIC.

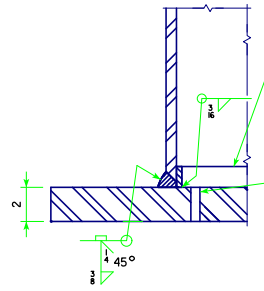

SECTION B-B

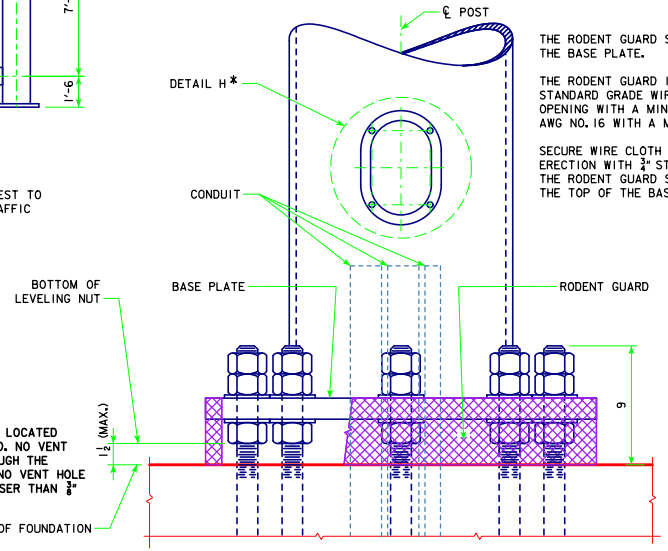

THE RODENT GUARD SHALL BE PLACED AROUND THE BASE PLATE.

THE RODENT GUARD IS STAINLESS STEEL STANDARD GRADE WIRE CLOTH, 1/4" MAXIMUM OPENING WITH A MINIMUM WIRE DIAMETER OF AWG NO. 16 WITH A MINIMUM 2" LAP.

SECURE WIRE CLOTH TO BASE PLATE AFTER ERECTION WITH 3/4" STAINLESS STEEL BANDING. THE RODENT GUARD SHALL NOT EXTEND ABOVE THE TOP OF THE BASE PLATE.

BASE SIDE VIEW

OPPOSITE OF TRAFFIC SIDE

NOTE: SEE STANDARD SHEET SOST-08-11 FOR DETAILS B, C, D, AND E.

NOTE: SEE STANDARD SHEET SOST-09-11 FOR DETAILS F AND G.

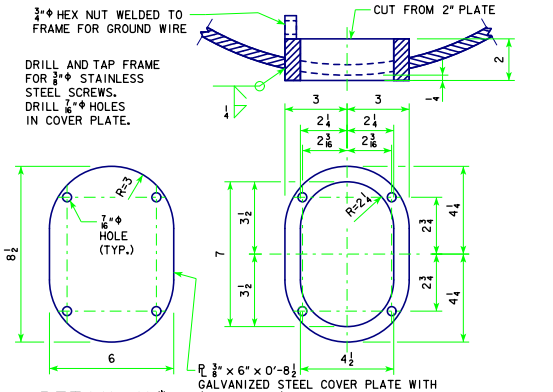

DETAIL H *

09-14 LATEST REVISION DATE	APPROVED BY BRIDGE ENGINEER	IOWA DOT Highway Division
		STANDARD DESIGN STEEL OVERHEAD SIGN TRUSS SEPTEMBER, 2011
		SUPPORT POST BASE AND DMS ELECTRICAL ACCESS DETAILS 105'-130' SPANS
		SOST-07-11

REVISION: 09-14 - MODIFIED NOTES.
STEELOVERHEADSIGNTRUSS.DGN - SOST-06-11 - THIS SHEET ISSUED 09-11.