1. SW-601 Type A or SW-602 Type G casting.
2. Place bedding material to springline of pipe.
3. Prevent riser from bearing on pipe by providing an arched opening with a diameter up to 6 inches larger than pipe diameter.

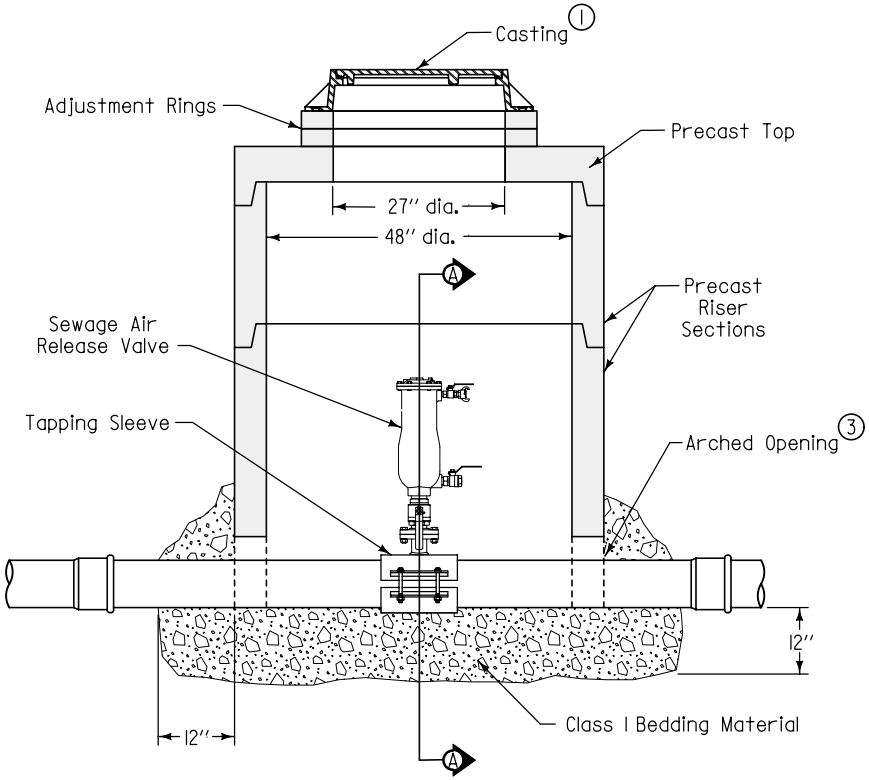

TYPICAL SECTION

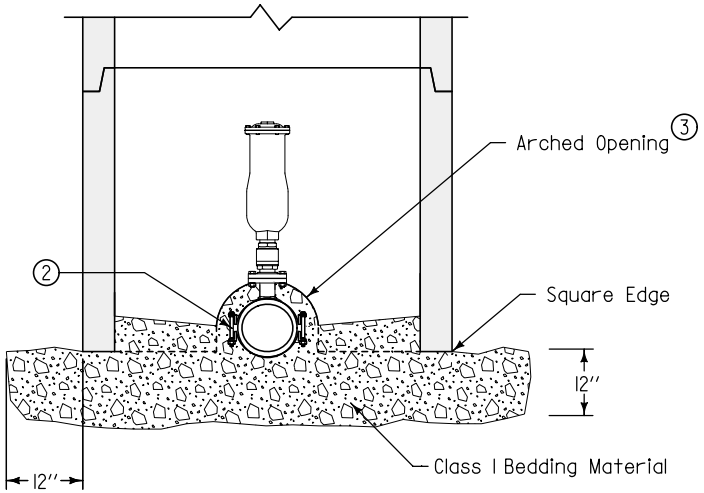

SECTION A-A

SUDAS	Iowa Department of Transportation	REVISION NEW 04-21-09
FIGURE 4010.202	STANDARD ROAD PLAN	SW-202 SHEET 1 of 1

REVISIONS: New. Replaces SUDAS Figure 4010.3

SUDAS DIRECTOR — DESIGN METHODS ENGINEER

SEWAGE AIR RELEASE VALVE PIT

FIGURE 4010.202 SHEET 1 OF 1