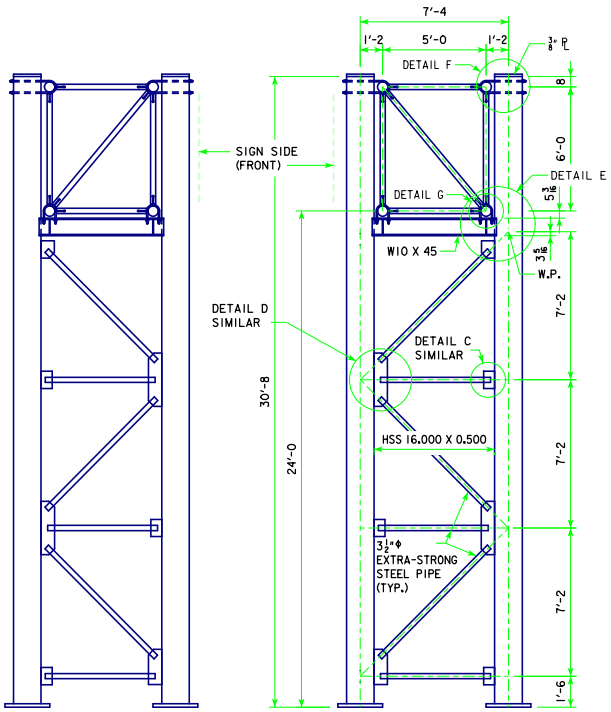

LEFT

RIGHT

END VIEW OF TRUSS SUPPORTS

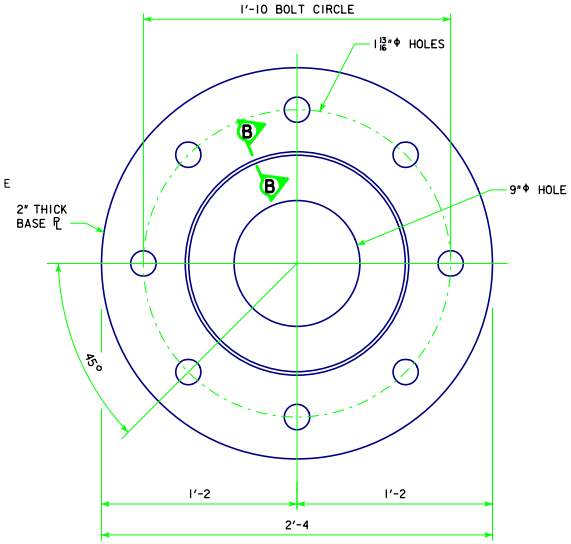

BASE PLATE PLAN

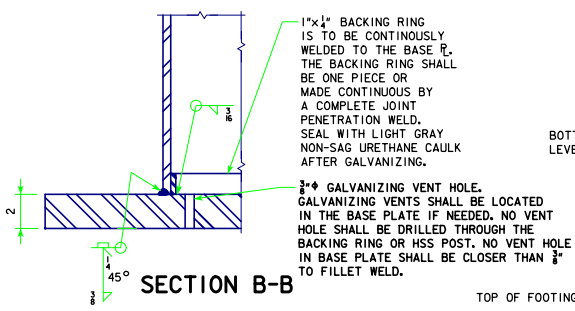

SECTION B-B

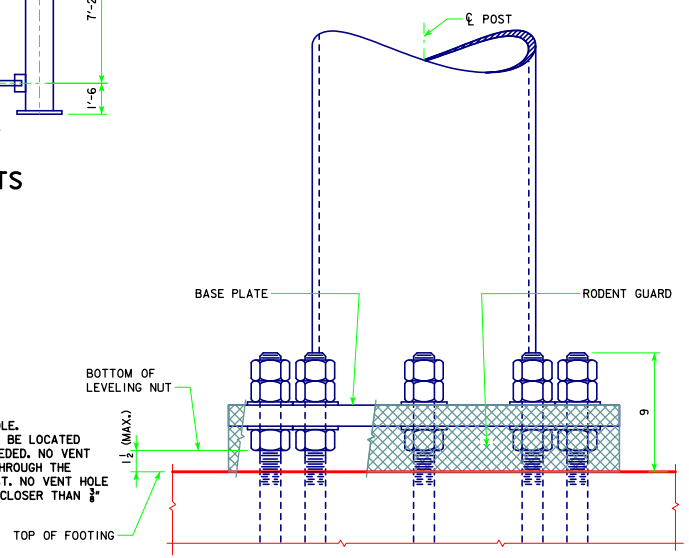

BASE SIDE VIEW

OPPOSITE OF TRAFFIC SIDE

NOTE: SEE STANDARD SHEET SOST-08-11 FOR DETAILS C, D, AND E.

NOTE: SEE STANDARD SHEET SOST-09-11 FOR DETAILS F AND G.

LATEST REVISION DATE

APPROVED BY BRIDGE ENGINEER

Iowa Department of Transportation
Highway Division

STANDARD DESIGN

STEEL OVERHEAD SIGN TRUSS

SEPTEMBER, 2011

SUPPORT POST BASE DETAILS

105'-130' SPANS

SOST-07-11

STEELOVERHEADSIGNTRUSS.DGN - SOST-07-11 - THIS SHEET ISSUED 9-11.