BILL OF REINF. FOR ONE HEADWALL 45° SKEW CULVERT SPAN X CULVERT HEIGHT

LOCATION	SHAPE	SIZE	MARK	1800×2400 NO.	1800×2400 LENGTH	1800×2400 MASS	1800×1800 NO.	1800×1800 LENGTH	1800×1800 MASS	1800×1500 NO.	1800×1500 LENGTH	1800×1500 MASS	1800×1200 NO.	1800×1200 LENGTH	1800×1200 MASS	1800×900 NO.	1800×900 LENGTH	1800×900 MASS	MARK
FENCE ANCHOR		15	fa	2	930	3	2	930	3	2	930	3	2	930	3	2	930	3	fa
WINGWALL, BFH L		15	b1	1	15 430	24	1	11 930	19	1	10 180	16	1	8430	13	1	6680	10	b1
WINGWALL, BFH S		15	b2	1	9600	15	1	7500	12	1	6450	10	1	5400	8	1	4350	7	b2
WINGWALL BFH L		15	b3	6 (LENGTH VARIES)	5700 TO 14 450	97	4 (LENGTH VARIES)	5700 TO 10 950	52	3 (LENGTH VARIES)	5700 TO 9200	35	2 (LENGTH VARIES)	5700 TO 7450	21	1	5700	9	b3
WINGWALL BFH S		15	b4	6 (LENGTH VARIES)	3780 TO 9020	60	4 (LENGTH VARIES)	3780 TO 6920	34	3 (LENGTH VARIES)	3780 TO 5880	23	2 (LENGTH VARIES)	3780 TO 4830	14	1	3780	6	b4
WINGWALL FFH L		15	b5	1	15 430	24	1	11 930	19	1	10 180	16	1	8430	13	1	6680	10	b5
WINGWALL FFH S		15	b6	1	9600	15	1	7500	12	1	6450	10	1	5400	8	1	4350	7	b6
WINGWALL FFH L		15	b7	7 (LENGTH VARIES)	3960 TO 14 450	103	5 (LENGTH VARIES)	3960 TO 10 950	59	4 (LENGTH VARIES)	3960 TO 9200	41	3 (LENGTH VARIES)	3960 TO 7450	27	2 (LENGTH VARIES)	3960 TO 5700	15	b7
WINGWALL FFH S		15	b8	7 (LENGTH VARIES)	2730 TO 9020	65	5 (LENGTH VARIES)	2730 TO 6920	38	4 (LENGTH VARIES)	2730 TO 5880	27	3 (LENGTH VARIES)	2730 TO 4830	18	2 (LENGTH VARIES)	2730 TO 3780	10	b8
WINGWALL FFV L		15	c1	49 (LENGTH VARIES)	760 TO 3220	153	37 (LENGTH VARIES)	760 TO 2610	98	31 (LENGTH VARIES)	760 TO 2300	74	25 (LENGTH VARIES)	760 TO 1990	54	19 (LENGTH VARIES)	760 TO 1680	36	c1
WINGWALL FFV S		15	c2	29 (LENGTH VARIES)	770 TO 3170	90	22 (LENGTH VARIES)	770 TO 2570	58	19 (LENGTH VARIES)	770 TO 2310	46	15 (LENGTH VARIES)	770 TO 1970	32	12 (LENGTH VARIES)	770 TO 1710	23	c2
WINGWALL FFV L		15	c3	2	3100	10	2	2500	8	2	2200	7	2	1900	6	2	1600	5	c3
WINGWALL FFV S		15	c3	2	3100	10	2	2500	8	2	2200	7	2	1900	6	2	1600	5	c3
WINGWALL BFV L		15	c4	15 (LENGTH VARIES)	760 TO 1480	26	15 (LENGTH VARIES)	760 TO 1480	26	15 (LENGTH VARIES)	760 TO 1480	26	15 (LENGTH VARIES)	760 TO 1480	26	15 (LENGTH VARIES)	760 TO 1480	26	c4
WINGWALL BFV S		15	c5	4 (LENGTH VARIES)	770 TO 1030	6	4 (LENGTH VARIES)	770 TO 1030	6	4 (LENGTH VARIES)	770 TO 1030	6	4 (LENGTH VARIES)	770 TO 1030	6	4 (LENGTH VARIES)	770 TO 1030	6	c5
WINGWALL BFV L		15	c6	94 (LENGTH VARIES)	2730 TO 4420	191	22 (LENGTH VARIES)	2730 TO 3810	113	16 (LENGTH VARIES)	2730 TO 3500	78	10 (LENGTH VARIES)	2730 TO 3190	46	4 (LENGTH VARIES)	2730 TO 2880	18	c6
WINGWALL BFV S		15	c7	25 (LENGTH VARIES)	2310 TO 4370	131	18 (LENGTH VARIES)	2310 TO 3770	86	15 (LENGTH VARIES)	2310 TO 3510	69	11 (LENGTH VARIES)	2310 TO 3170	47	8 (LENGTH VARIES)	2310 TO 2910	33	c7
WINGWALL BFV L		15	c8	18	3150	89	---	---	0	---	---	0	---	---	0	---	---	0	c8
WINGWALL BFV S		15	c8	12	3150	59	---	---	0	---	---	0	---	---	0	---	---	0	c8
WINGWALL BFV L		15	c9	1	4300	7	1	3700	6	1	3400	5	1	3100	5	1	2800	4	c9
WINGWALL BFV S		15	c9	2	4300	14	2	3700	12	2	3400	11	2	3100	10	2	2800	9	c9
APRON, LONG BOT		15	d1	5	8270	85	5	6580	52	5	5730	45	5	4880	38	5	4030	32	d1
APRON, LONG BOT L		15	d2	3	14 200	67	3	10 730	51	3	9000	42	3	7280	34	3	5570	26	d2
APRON, LONG BOT S		15	d3	3	8610	41	3	6540	31	3	5510	26	3	4480	21	3	3470	16	d3
APRON, LONG TOP		20	f1	6	8270	117	6	6580	93	6	5730	81	6	4880	69	6	4030	57	f1
APRON, LONG TOP L		20	f2	11 (LENGTH VARIES)	670 TO 6750	96	8 (LENGTH VARIES)	780 TO 5060	55	7 (LENGTH VARIES)	530 TO 4210	39	6 (LENGTH VARIES)	280 TO 3360	26	4 (LENGTH VARIES)	640 TO 2500	15	f2
APRON, LONG TOP S		20	f3	7 (LENGTH VARIES)	530 TO 6660	59	5 (LENGTH VARIES)	840 TO 4960	34	4 (LENGTH VARIES)	1000 TO 4110	24	3 (LENGTH VARIES)	1170 TO 3250	16	3 (LENGTH VARIES)	290 TO 2400	10	f3
APRON, LONG TOP L		20	f4	1	15 430	36	1	11 930	28	1	10 180	24	1	8430	20	1	6680	16	f4
APRON, LONG TOP S		20	f5	1	9600	23	1	7500	18	1	6450	15	1	5400	13	1	4350	10	f5
PARAPET, VERT		15	j1	13	2040	42	13	2040	42	13	2040	42	13	2040	42	13	2040	42	j1
PARAPET, HORIZ		25	j1	4	3130	49	4	3050	48	4	3050	48	4	3050	48	4	3050	48	j1
APRON, TRANS TOP		20	m1	6 (LENGTH VARIES)	2360 TO 2640	35	6 (LENGTH VARIES)	2810 TO 2580	35	6 (LENGTH VARIES)	2310 TO 2580	35	6 (LENGTH VARIES)	2310 TO 2580	35	6 (LENGTH VARIES)	2310 TO 2580	35	m1
APRON, TRANS TOP		20	m2	23 (LENGTH VARIES)	2720 TO 5140	213	15 (LENGTH VARIES)	2670 TO 4210	122	11 (LENGTH VARIES)	2670 TO 3770	83	7 (LENGTH VARIES)	2670 TO 3330	49	4 (LENGTH VARIES)	2670 TO 3000	27	m2
APRON, TRANS TOP		20	m3	5	3430	40	5	2950	35	5	2640	31	5	2460	29	5	2290	27	m3
APRON, TRANS BOT		20	m4	17 (LENGTH VARIES)	310 TO 5430	115	13 (LENGTH VARIES)	310 TO 4150	68	11 (LENGTH VARIES)	310 TO 3510	49	9 (LENGTH VARIES)	310 TO 2870	34	7 (LENGTH VARIES)	310 TO 2230	21	m4
CURTAIN, HORIZ		20	p1	4	2440	23	4	2440	23	4	2440	23	4	2440	23	4	2440	23	p1
CURTAIN, HORIZ L		20	p2	4	8940	84	4	7040	66	4	6090	57	4	5150	49	4	4200	40	p2
CURTAIN, HORIZ S		20	p3	4	3480	33	4	2870	27	4	2570	24	4	2260	21	4	1960	18	p3
WING SLOPE EF L		20	s1	2	3720	18	2	3720	18	2	3720	18	2	3720	18	2	3720	18	s1
WING SLOPE EF S		20	s2	2	2760	13	2	2760	13	2	2760	13	2	2760	13	2	2760	13	s2
WING SLOPE EF L		20	s3	2	12 570	59	2	9020	42	2	7250	34	2	5470	26	2	3700	17	s3
WING SLOPE EF S		20	s4	2	8080	38	2	5900	28	2	4810	23	2	3720	18	2	2630	12	s4
WING SLOPE FF L		20	s5	1	15 620	37	1	12 070	28	1	10 300	24	1	8530	20	1	6750	16	s5
WING SLOPE FF S		20	s6	1	9910	23	1	7710	18	1	6620	16	1	5530	13	1	4430	10	s6
CURTAIN, VERT		15	t1	28	2110	93	22	1960	68	19	1960	58	15	1960	46	12	1960	37	t1
REINF STEEL				2611 kg			1712 kg			1384 kg			1084 kg			828 kg			
ESTIMATED QUANTITIES	CONC	PARAPET Δ		1.2	30.8 m³		1.2	19.7 m³		1.2	15.8 m³		1.2	12.2 m³		1.2	9.1 m³		
		WINGS		10.2			5.6			4.1			2.8			1.7			
ONE HEADWALL		FOOTING		19.4			12.9			10.5			8.2			6.2			

NOTES: Δ INCLUDES TOP OF WINGWALL QUANTITIES.

ΔΔ SUBSCRIPT L DENOTES LONG WING.
SUBSCRIPT S DENOTES SHORT WING.

REVISED 04-02 - CHANGED THE NUMBER OF d1 BARS FOR 1800 SPANS. CONCRETE QUANTITIES ADJUSTED.
FWH45M.SO1

REVISED 1/98; BEND DIMENSIONS OF i1 BAR CHANGED.

BENT BAR DETAILS

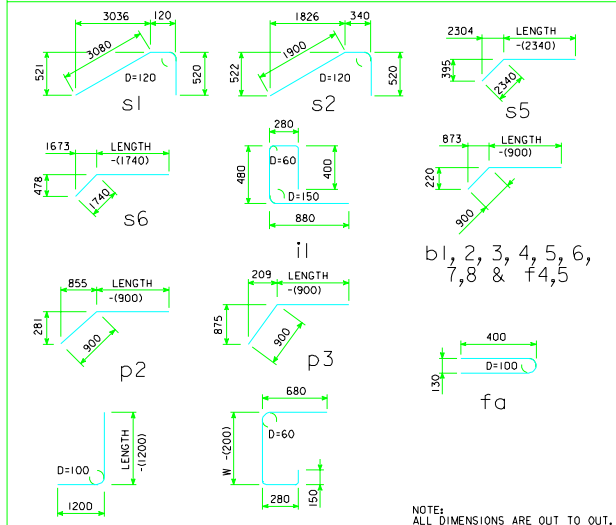

NOTE:
ALL DIMENSIONS ARE OUT TO OUT.
D = PIN DIAMETER.

HEADWALL NOTES:

THIS HEADWALL IS BASED ON A 3:1 SLOPE NORMAL TO CENTERLINE OF ROADWAY.

THE SIDES OF THE FOOTING ARE TO BE FORMED TO INSURE CORRECT LINE AND GRADE.

ALL EXPOSED CORNERS OF 90° OR SHARPER ARE TO BE FILLETED WITH A 20 mm DRESSED AND BEVELED STRIP.

ALL REINFORCING IS TO BE SECURELY WIRED IN PLACE BEFORE THE CONCRETE IS POURED. ALL SLAB AND FLOOR REINFORCING STEEL IS TO BE SUPPORTED BY BAR CHAIRS AT INTERVALS OF NOT MORE THAN 900 mm IN EITHER DIRECTION AS OUTLINED IN THE STANDARD SPECIFICATIONS.

CLEAR DISTANCE FROM FACE OF CONCRETE TO NEAR REINFORCING BAR IS TO BE 50 mm UNLESS OTHERWISE NOTED OR SHOWN. CLEARANCE TO THE BOTTOM ENDS OF VERTICAL BARS SHALL BE 75 mm.

CONCRETE QUANTITIES ARE ESTIMATED FROM BACK OF PARAPET.

HORIZONTAL TAILS OF BARS "b" & "s" ESTIMATED TO EXTEND 600 mm BEYOND BACK OF PARAPET (INTO END OF BARREL). LONGITUDINAL BARS "d", "f1", "f4" AND "f5" ESTIMATED TO PROJECT INTO END SECTION OF BARREL A MINIMUM OF 600 mm BEYOND BACK OF PARAPET.

THE "LENGTH" COLUMN REFLECTS TOTAL NUMBER OF MILLIMETERS NECESSARY TO MEET CLEARANCE REQUIREMENTS. "MASS" COLUMN INCLUDES AN ALLOWANCE OF 650 mm FOR LAP ON BARS THAT ARE OVER 12 000 mm LONG.

ALL DIMENSIONS ARE IN MILLIMETERS (mm) UNLESS OTHERWISE NOTED OR SHOWN.

NOTES:

1. SEE SHEET MRCB-G1-95 FOR GENERAL INFORMATION, SPECIFICATIONS, AND DESIGN STRESSES.

LATEST REVISION DATE : 04-02

APPROVED BY : William A. Kuehnast

STANDARD DESIGN

FLARED WING HEADWALLS

FOR
REINFORCED CONCRETE BOX CULVERTS

PROJECT DEVELOPMENT DIVISION
IOWA DEPARTMENT OF TRANSPORTATION

JULY, 1995

MFWH 45-4-95

XXXXXXXXXXSYSTEMTIME XXXXXXXUSERNAME XXXXXXXXXX