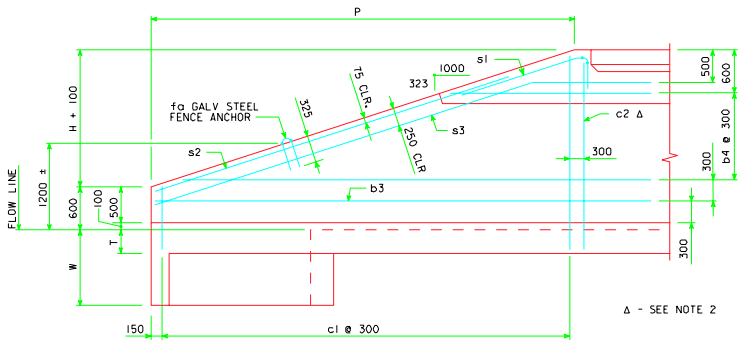

TYPICAL VIEW - FRONT FACE REINFORCING

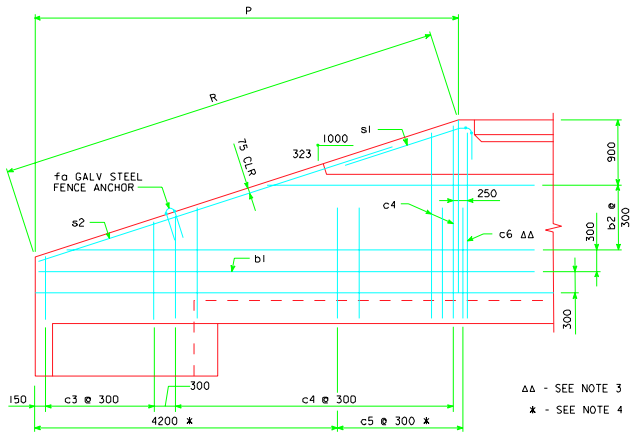

TYPICAL VIEW - BACK FACE REINFORCING

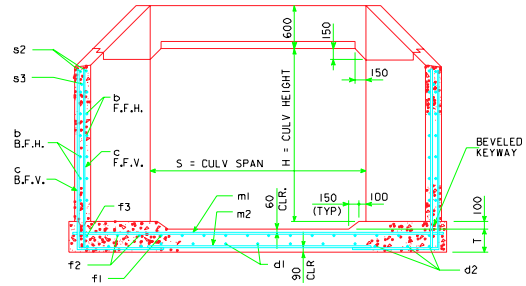

TYPICAL SECTION - NEAR CENTER OF APRON

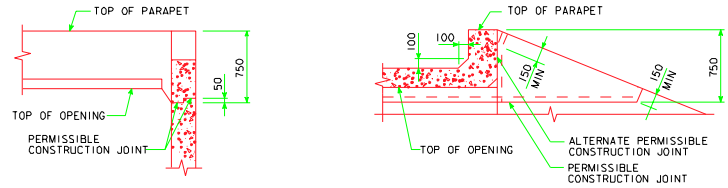

TOP OF WINGWALL DETAILS

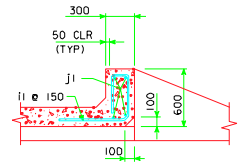

SECTION THRU PARAPET

NOTES :

1. BAR SPACINGS AND POSITIONS SHOWN ARE SIMILAR FOR ALL SIZES OF HEADWALLS IN THIS STANDARD.
2. ONE c2 BARS, HEADWALL HEIGHTS OF H=1800, H=2400, H=3000 AND TWO c2 BARS, HEADWALL HEIGHTS OF H=900, H=1200, H=1500 AND H=3600.
3. ONE c6 BAR, HEADWALL HEIGHTS OF H=1800, H=2400, H=3000 AND TWO c6 BARS, HEADWALL HEIGHTS OF H=900, H=1200, H=1500, AND H=3600.
4. NOT APPLICABLE TO HEADWALL HEIGHTS OF H=900, H=1200, H=1500 AND H=1800.
5. FOR DIMENSION TABLE SEE SHEET MFWH 0-4-95.

LATEST REVISION DATE : 1-98

APPROVED BY : William A. Stanhopf

STANDARD DESIGN

FLARED WING HEADWALLS

FOR
REINFORCED CONCRETE BOX CULVERTS

PROJECT DEVELOPMENT DIVISION
IOWA DEPARTMENT OF TRANSPORTATION

JULY, 1995

MFWH 0-6-95

REVISED 1/98; CLEAR DISTANCE TO I1 BAR CHANGED.
FWH06M.S01

REVISED : 12/96 ; KEYWAY NOTATION CHANGED.

XXXXXXXXXXSYSTEMTIME XXXXXXXXUSERNAME XXXXXXXXXX