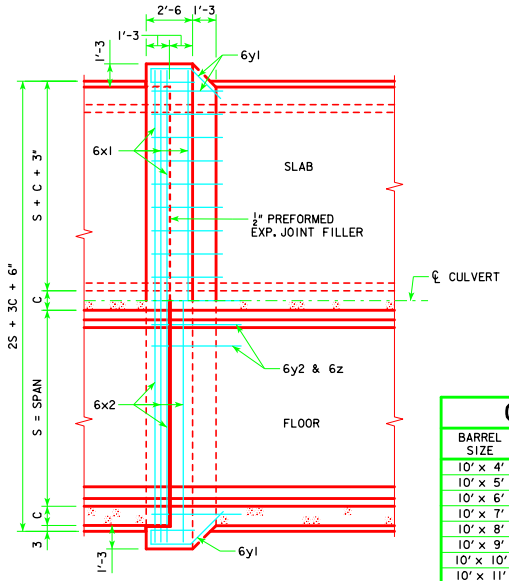

PLAN VIEW

ESTIMATE OF QUANTITIES - ONE JOINT - 10' SPAN

BILL OF REINFORCING STEEL			10' x 4'			10' x 5'			10' x 6'			10' x 7'			10' x 8'			10' x 9'			10' x 10'			10' x 11'			10' x 12'		
BAR	LOCATION	SHAPE	NO.	LENGTH	WEIGHT	NO.	LENGTH	WEIGHT	NO.	LENGTH	WEIGHT	NO.	LENGTH	WEIGHT	NO.	LENGTH	WEIGHT	NO.	LENGTH	WEIGHT	NO.	LENGTH	WEIGHT	NO.	LENGTH	WEIGHT	NO.	LENGTH	WEIGHT
6x1	SLAB & WALLS		4	34'-6	207	4	34'-6	207	4	34'-6	207	4	34'-6	207	4	34'-6	207	4	34'-6	207	4	34'-10	209	4	35'-1	211	4	35'-4	212
6x2	FLOOR & WALLS		4	36'-8	220	4	38'-8	232	4	34'-4	206	4	34'-4	206	4	34'-4	206	4	34'-4	206	4	34'-8	208	4	34'-11	210	4	35'-2	211
6x3	WALLS		--	--	--	--	--	--	8	5'-4	64	8	6'-4	76	8	7'-4	88	8	8'-4	100	8	9'-4	112	8	10'-4	124	8	11'-4	136
6y1	TOP & SIDES		35	8'-0	421	37	8'-0	445	39	8'-0	469	41	8'-0	493	43	8'-0	517	45	8'-0	541	47	8'-0	565	49	8'-0	589	51	8'-0	613
6y2	BOTTOM		23	9'-6	328	23	9'-6	328	23	9'-6	328	23	9'-7	331	23	9'-7	331	23	9'-7	331	23	9'-7	331	23	9'-7	331	23	9'-7	331
6z	BOTTOM & FLOOR		23	3'-11	135	23	3'-11	135	23	3'-11	135	23	3'-11	135	23	3'-11	135	23	3'-11	135	23	3'-11	135	23	3'-11	135	23	3'-11	135
TOTAL WEIGHT (LB)					1311			1347			1409			1448			1484			1520			1560			1600			1638
TOTAL CONCRETE (CY)				9.6			9.9			10.2			10.5			10.8			11.1			11.5			11.8			12.2	

ESTIMATE OF QUANTITIES - ONE JOINT - 12' SPAN

BILL OF REINFORCING STEEL			12' x 4'			12' x 5'			12' x 6'			12' x 7'			12' x 8'			12' x 9'			12' x 10'			12' x 11'			12' x 12'		
BAR	LOCATION	SHAPE	NO.	LENGTH	WEIGHT	NO.	LENGTH	WEIGHT	NO.	LENGTH	WEIGHT	NO.	LENGTH	WEIGHT	NO.	LENGTH	WEIGHT	NO.	LENGTH	WEIGHT	NO.	LENGTH	WEIGHT	NO.	LENGTH	WEIGHT	NO.	LENGTH	WEIGHT
6x1	SLAB & WALLS		4	38'-6	231	4	38'-6	231	4	38'-6	231	4	38'-6	231	4	38'-6	231	4	38'-6	231	4	38'-10	233	4	39'-1	235	4	39'-4	236
6x2	FLOOR & WALLS		4	40'-8	244	4	42'-8	256	4	38'-4	230	4	38'-4	230	4	38'-4	230	4	38'-4	230	4	38'-8	232	4	38'-11	234	4	39'-2	235
6x3	WALLS		--	--	--	--	--	--	8	5'-4	64	8	6'-4	76	8	7'-4	88	8	8'-4	100	8	9'-4	112	8	10'-4	124	8	11'-4	136
6y1	TOP & SIDES		39	8'-0	469	41	8'-0	493	43	8'-0	517	45	8'-0	541	47	8'-0	565	49	8'-0	589	51	8'-0	613	53	8'-0	637	55	8'-0	661
6y2	BOTTOM		27	9'-9	395	27	9'-9	395	27	9'-7	389	27	9'-10	399	27	9'-10	399	27	9'-10	399	27	9'-10	399	27	9'-10	399	27	9'-10	399
6z	BOTTOM & FLOOR		27	3'-11	159	27	3'-11	159	27	3'-11	159	27	3'-11	159	27	3'-11	159	27	3'-11	159	27	3'-11	159	27	3'-11	159	27	3'-11	159
TOTAL WEIGHT (LB)					1498			1534			1590			1636			1672			1708			1748			1788			1826
TOTAL CONCRETE (CY)				11.0			11.3			11.5			11.8			12.1			12.4			12.8			13.2			13.5	

CONCRETE PLACEMENT

BARREL SIZE	BARREL DIMENSION			BELL JOINT QUANTITES (CY)		
	A	B	C	FOOTING	WALLS	SLAB
10' x 4'	12.5	14.5	9	4.665	1.047	3.906
10' x 5'	12.5	14.5	9	4.665	1.332	3.906
10' x 6'	12.5	14.5	9	4.665	1.618	3.906
10' x 7'	12.5	15	9	4.677	1.903	3.906
10' x 8'	13	15	9	4.677	2.189	3.918
10' x 9'	13	15	9	4.677	2.474	3.918
10' x 10'	12.5	15	10.5	4.741	2.760	3.960
10' x 11'	12.5	15	11.5	4.784	3.045	3.995
10' x 12'	12.5	15	12.5	4.827	3.331	4.031
12' x 4'	14.5	16.5	9	5.399	1.047	4.525
12' x 5'	14.5	16.5	9	5.399	1.332	4.525
12' x 6'	13	15	9	5.364	1.618	4.489
12' x 7'	14.5	17	9	5.411	1.903	4.525
12' x 8'	15	17	9	5.411	2.189	4.537
12' x 9'	15	17	9	5.411	2.474	4.537
12' x 10'	14.5	17	10.5	5.476	2.760	4.578
12' x 11'	14.5	17	11.5	5.518	3.045	4.614
12' x 12'	14.5	17	12.5	5.561	3.331	4.650

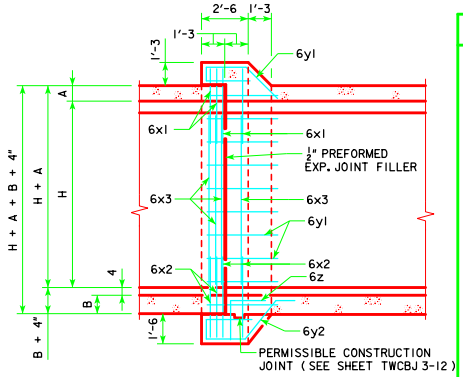

LONGITUDINAL SECTION

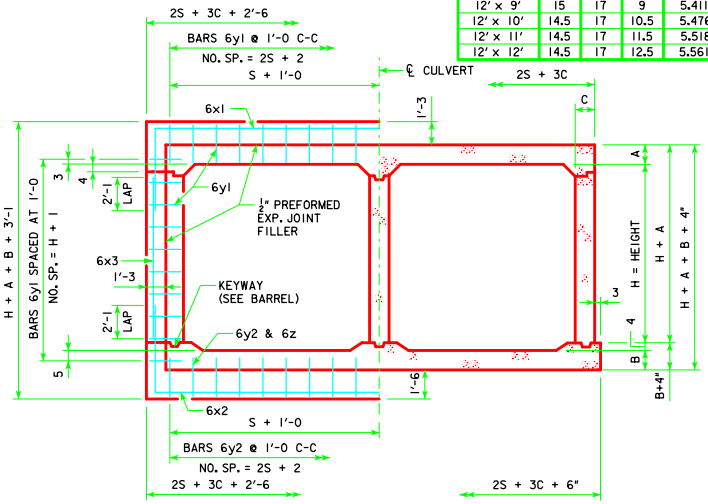

JOINT DETAIL
SECTION THRU BARREL

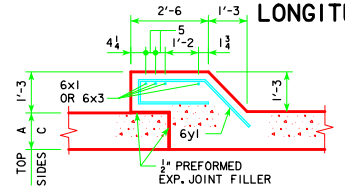

TOP & SIDES - BARS 6y1

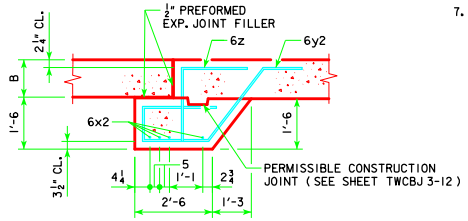

BOTTOM - BARS 6y2 & 6z

BENT BAR DETAILS

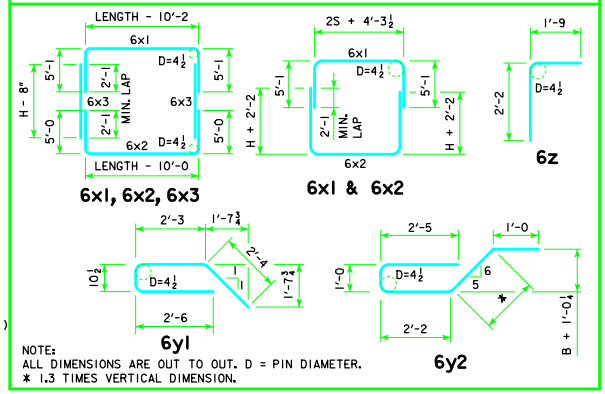

NOTES:

1. DIMENSIONS AND QUANTITIES SHOWN ARE BASED ON SLAB, FLOOR, AND WALL THICKNESSES (A, B, AND C, RESPECTIVELY). VALUES FOR THESE DIMENSIONS, UNDER VARYING FILL CONDITIONS, CAN BE FOUND ON THE TWRCB CULVERT BARREL DETAIL SHEETS.
2. CHANGE LENGTHS OF BARS 6x1, 6x2, 6z, AND ADJUST REINFORCING STEEL AND CONCRETE QUANTITIES ACCORDINGLY FOR SLAB, WALL AND FLOOR THICKNESSES OTHER THAN SHOWN.
3. ALL BAR LENGTHS ARE ESTIMATED WITH A 2" CLEARANCE FROM CONCRETE EDGE TO OUTSIDE OF BAR, EXCEPT AS NOTED.
4. MATERIAL AND CONSTRUCTION TO BE IN ACCORDANCE WITH THE CURRENT STANDARD SPECIFICATIONS OF I.D.O.T.
5. SEE SHEET TWRCB GI-12 FOR GENERAL INFORMATION, SPECIFICATIONS AND DESIGN STRESSES.
6. BARS 6x1 & 6x2 MAY BE FURNISHED IN TWO EQUAL LENGTHS ADDING 2'-3 TO THE OVERALL LENGTH TO OBTAIN A 2'-3 MIN. LAP. THE ABOVE IS TO BE PERFORMED AT NO ADDITIONAL COST TO THE CONTRACTING AUTHORITY.
7. BARREL FLOOR BARS m1 ARE TO BE SHORTENED 6" AT BELL JOINTS.

LATEST REVISION DATE

APPROVED BY BRIDGE ENGINEER

Iowa Department of Transportation
Highway Division

STANDARD DESIGN

TWIN REINFORCED CONCRETE BOX CULVERTS

APRIL, 2012

CULVERT BELL JOINTS

10' & 12' SPANS

TWCBJ 2-12

ENGLISH_REDSIGNED_TWINCULVERTS.DGN - TWCBJ 2-12 - THIS SHEET ISSUED 04-12