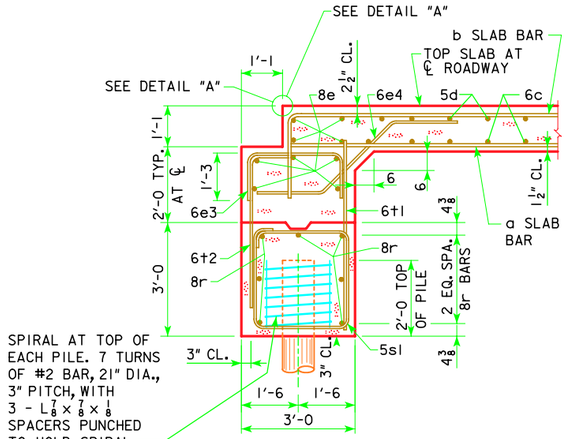

SECTION NORMAL TO ABUTMENT AT ℄

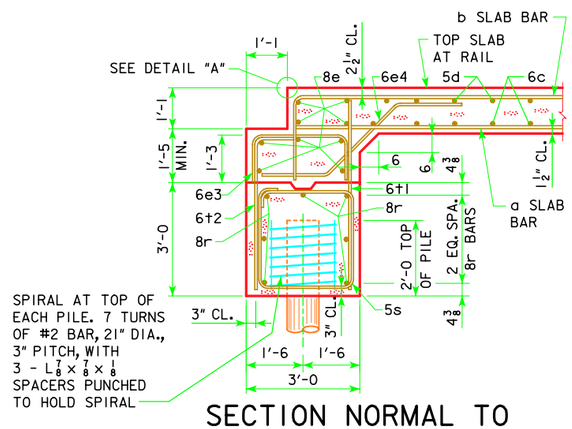

SECTION NORMAL TO ABUTMENT AT GUTTERLINE

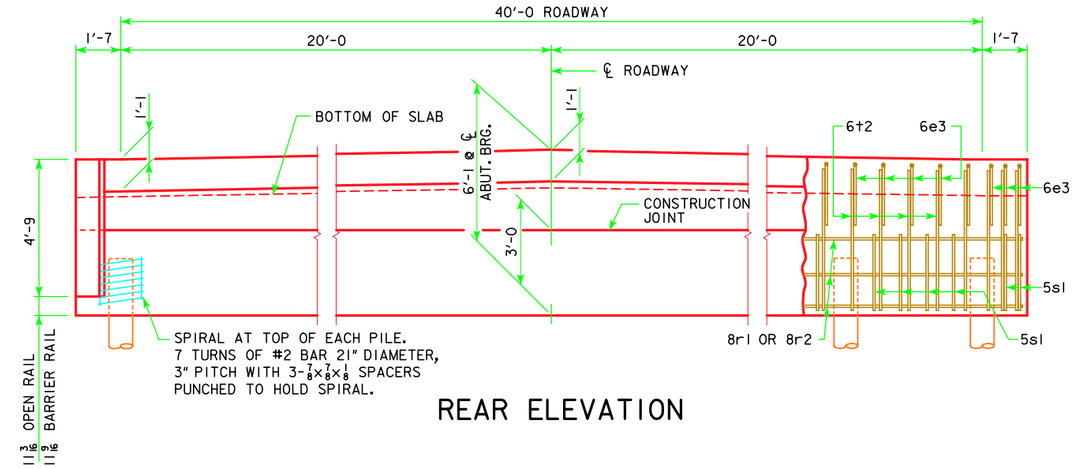

REAR ELEVATION

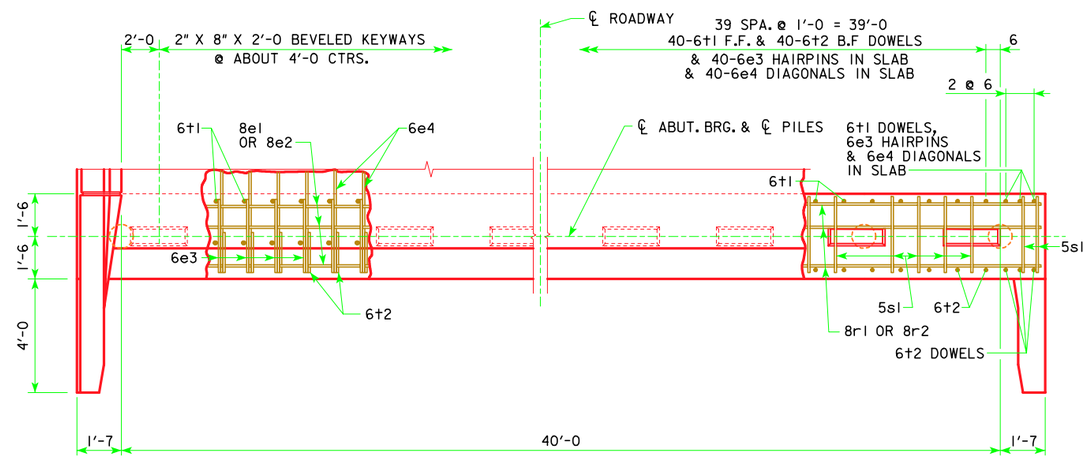

PLAN VIEW

NOTE: WING REINFORCING AND RAIL NOT SHOWN.

6e3, 6e4, AND 8e ARE INCLUDED WITH SUPERSTRUCTURE QUANTITIES.

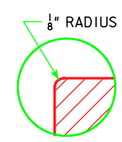

DETAIL "A"

ABUTMENT NOTES:

THE CONCRETE AND REINFORCING STEEL FOR THE WINGS IS INCLUDED WITH THE SUPERSTRUCTURE.

DETAILS ON THIS SHEET ARE TO BE USED ONLY WHEN ABUTMENTS ARE PLACED ON TIMBER PILES.

THE MINIMUM CLEAR DISTANCE FROM THE FACE OF THE CONCRETE TO NEAR REINFORCING BAR IS TO BE 2 INCHES UNLESS OTHERWISE NOTED OR SHOWN.

THE ABUTMENT PILES ARE TO BE DRIVEN TO FULL PENETRATION, IF PRACTICABLE, BUT IN NO CASE TO A BEARING VALUE LESS THAN THE PILE BEARING REQUIRED FOR EACH BRIDGE LENGTH AS SHOWN ON THIS SHEET, NOR TO MORE THAN 40 TONS PER BEARING PILE.

ALL REINFORCING STEEL IS TO BE GRADE 60.

ABUTMENT PILING WAS DESIGNED FOR HL-93 LOADING WITH AN ALLOWANCE FOR 20 LBS. PER SQ. FT. FUTURE WEARING SURFACE.

REACTION, PILE NUMBER & BEARING

BRIDGE LENGTH	70'-0	80'-0	90'-0	100'-0	110'-0	120'-0	130'-0	140'-0	150'-0
REACTION - KIPS	361	384	404	430	456	485	514	Δ 589	Δ 623
BEARING - TONS	19	20	19	20	19	19	20	20	20
PILING - NUMBER	10	10	11	11	12	13	13	15	16
STRENGTH I REACTION - KIPS	483	515	546	585	623	666	708	Δ 830	Δ 879

ΔINCLUDES IMPACT

11-08
LATEST REVISION DATE

APPROVED BY BRIDGE ENGINEER

Iowa Department of Transportation
Highway Division

STANDARD DESIGN - 40' ROADWAY, 3 SPAN BRIDGES

CONTINUOUS CONCRETE SLAB BRIDGES

NOVEMBER, 2006

ABUTMENT DETAILS
0° SKEW - TIMBER PILING

J40-30-06

REVISED 11-08 - REVISED SHEET FOR NEW PAVING NOTCH & WING. DESIGN FOR HL-93 LOADING.