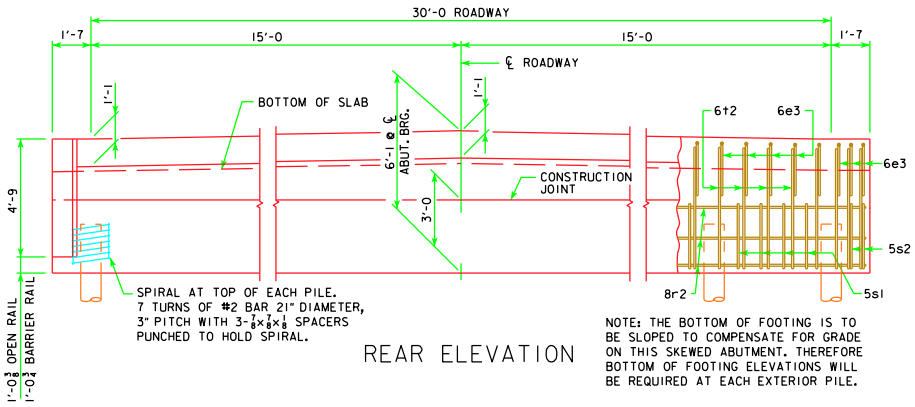

REAR ELEVATION

NOTE: THE BOTTOM OF FOOTING IS TO BE SLOPED TO COMPENSATE FOR GRADE ON THIS SKEWED ABUTMENT. THEREFORE BOTTOM OF FOOTING ELEVATIONS WILL BE REQUIRED AT EACH EXTERIOR PILE.

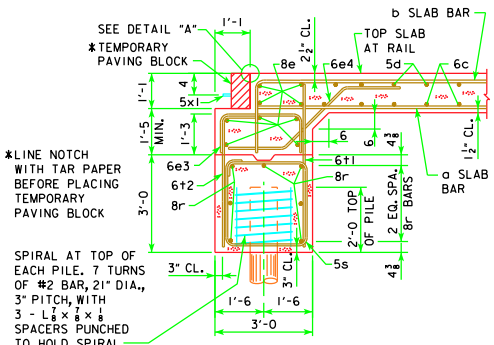

SECTION NORMAL TO ABUTMENT AT GUTTERLINE

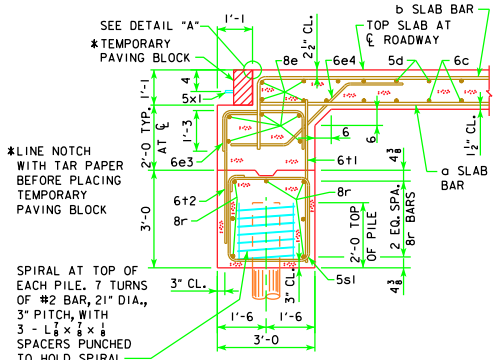

SECTION NORMAL TO ABUTMENT AT ℄

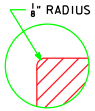

DETAIL "A"

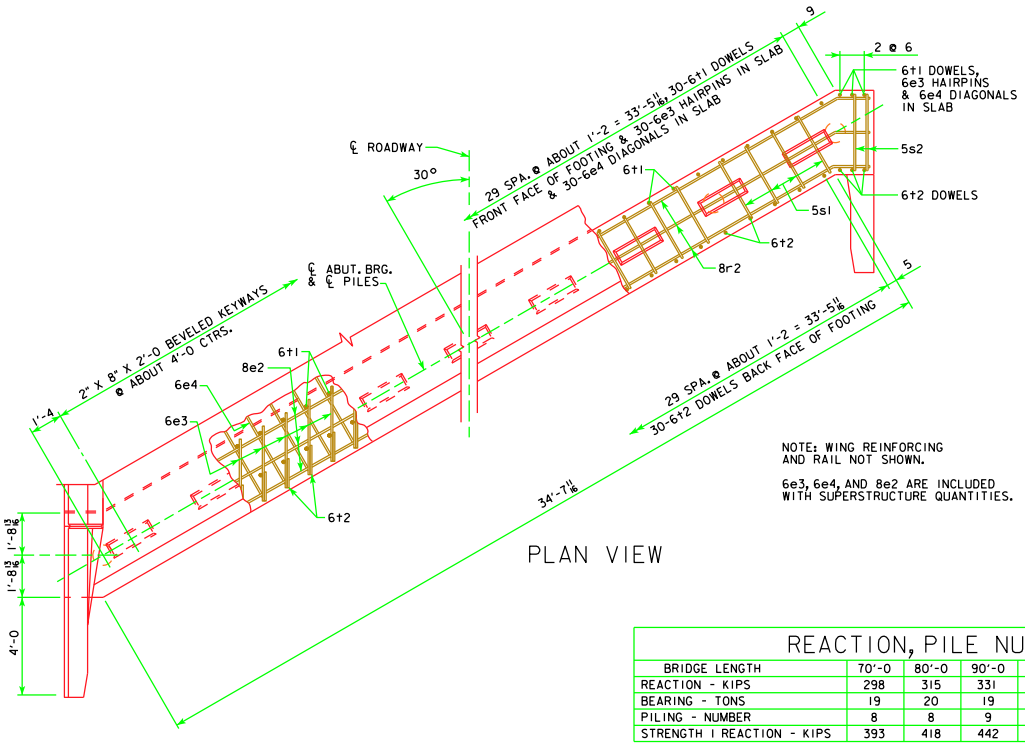

NOTE: WING REINFORCING AND RAIL NOT SHOWN.

6e3, 6e4, AND 8e2 ARE INCLUDED WITH SUPERSTRUCTURE QUANTITIES.

PLAN VIEW

ABUTMENT NOTES:

THE CONCRETE AND REINFORCING STEEL FOR THE WINGS IS INCLUDED WITH THE SUPERSTRUCTURE.

DETAILS ON THIS SHEET ARE TO BE USED ONLY WHEN ABUTMENTS ARE PLACED ON TIMBER PILES.

THE MINIMUM CLEAR DISTANCE FROM THE FACE OF THE CONCRETE TO NEAR REINFORCING BAR IS TO BE 2 INCHES UNLESS OTHERWISE NOTED OR SHOWN.

THE ABUTMENT PILES ARE TO BE DRIVEN TO FULL PENETRATION, IF PRACTICABLE, BUT IN NO CASE TO A BEARING VALUE LESS THAN THE PILE BEARING REQUIRED FOR EACH BRIDGE LENGTH AS SHOWN ON THIS SHEET, NOR TO MORE THAN 40 TONS PER BEARING PILE.

ALL REINFORCING STEEL IS TO BE GRADE 60.

ABUTMENT PILING WAS DESIGNED FOR HL-93 LOADING WITH AN ALLOWANCE FOR 20 LBS. PER SQ. FT. FUTURE WEARING SURFACE.

REACTION, PILE NUMBER & BEARING

BRIDGE LENGTH	70'-0	80'-0	90'-0	100'-0	110'-0	120'-0	130'-0	140'-0	150'-0
REACTION - KIPS	298	315	331	351	370	393	415	Δ 474	Δ 500
BEARING - TONS	19	20	19	20	19	20	19	20	20
PILING - NUMBER	8	8	9	9	10	10	11	12	13
STRENGTH I REACTION - KIPS	393	418	442	472	501	535	567	Δ 663	Δ 701

ΔINCLUDES IMPACT

12-08
LATEST REVISION DATE

APPROVED BY BRIDGE ENGINEER

Iowa Department of Transportation
Highway Division

STANDARD DESIGN - 30' ROADWAY, 3 SPAN BRIDGES

CONTINUOUS CONCRETE SLAB BRIDGES

NOVEMBER, 2006

ABUTMENT DETAILS
30° SKEW - TIMBER PILING

J30-29-06

REVISED 12-08 - REVISED SHEET FOR NEW PAVING NOTCH. DESIGN FOR HL-93 LOADING.