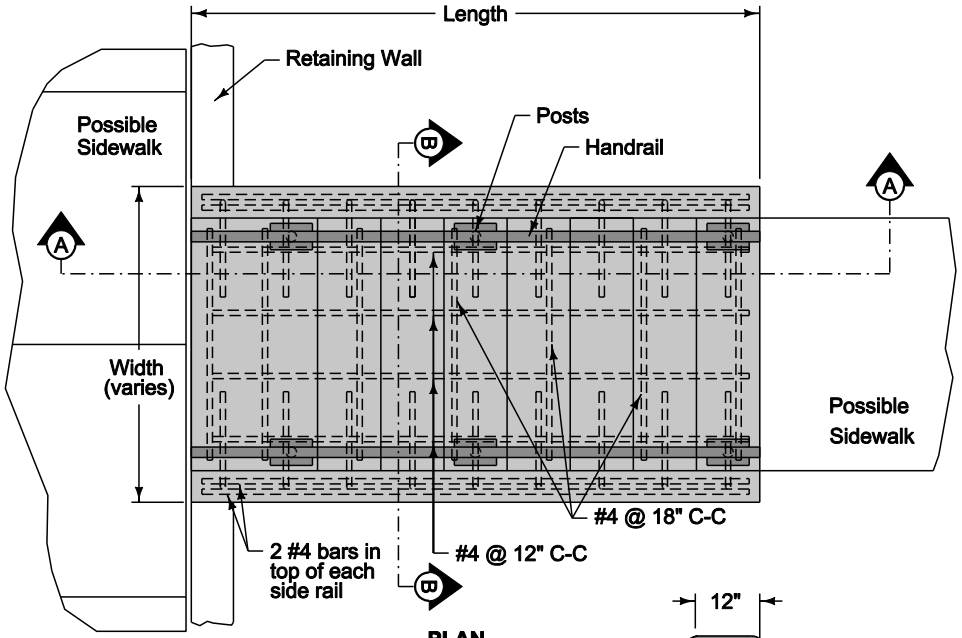

PLAN

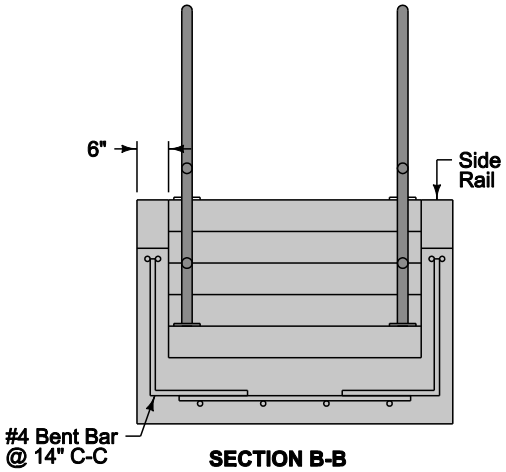

SECTION B-B

Provide a minimum of 2 inches of cover for all reinforcing.

Ensure all risers are an equal height and all treads are an equal depth within a flight of stairs.

1. Minimum riser height is 4 inches. Maximum riser height is 7 inches.
2. Minimum tread depth is 11 inches.
3. Match existing sidewalk width.
4. Construct cross slope of landing to match adjacent sidewalk.

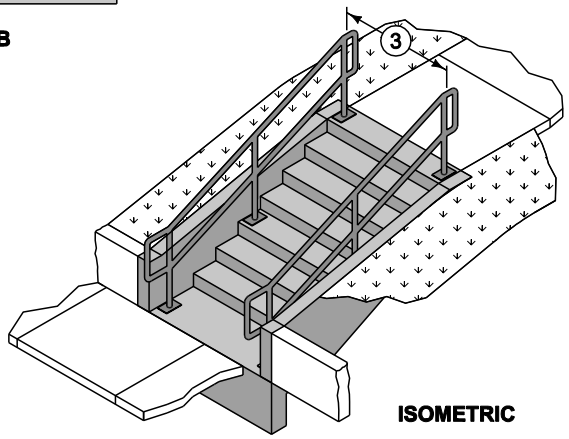

ISOMETRIC

	Rise 1	Tread 2
x	y	z
2	6"	12"
3	5"	15"
4	4"	16"

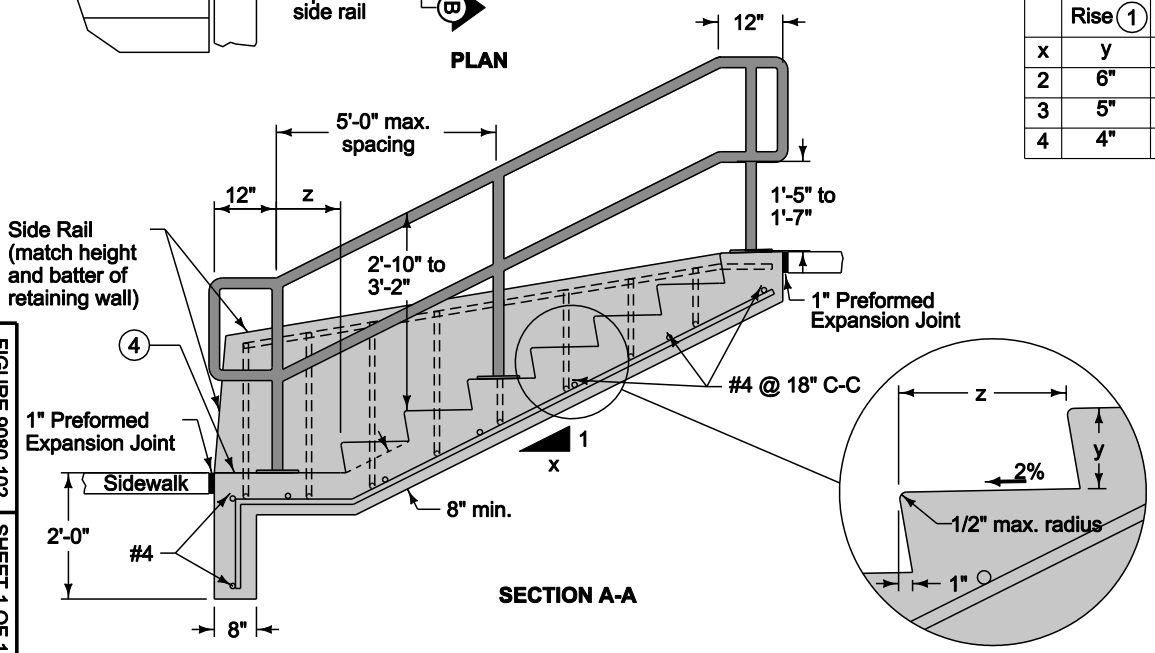

SECTION A-A

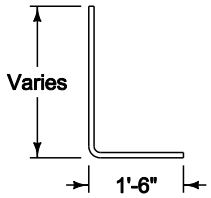

BENT BAR

SUDAS

REVISION	
New	10-18-11

9080.102

SHEET 1 of 1

SUDAS Standard Specifications

TYPE B CONCRETE STEPS WITH HANDRAIL

FIGURE 9080.102

SHEET 1 OF 1