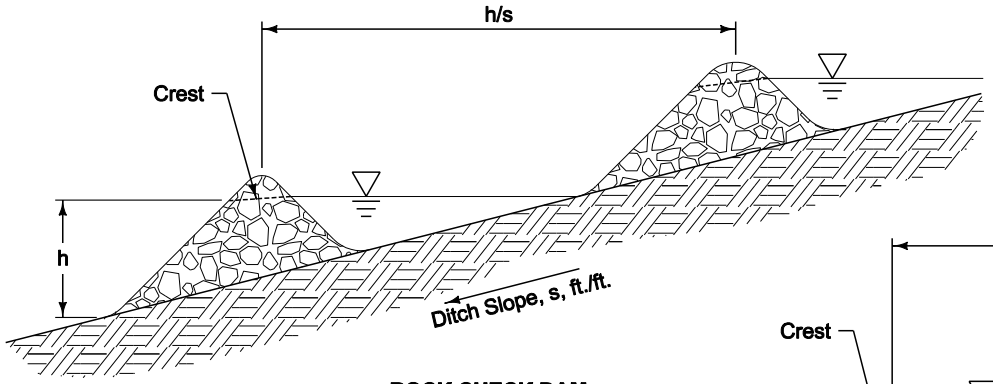

ROCK CHECK DAM

(See Figure 9040.7 for installation of Rock Check Dams.)

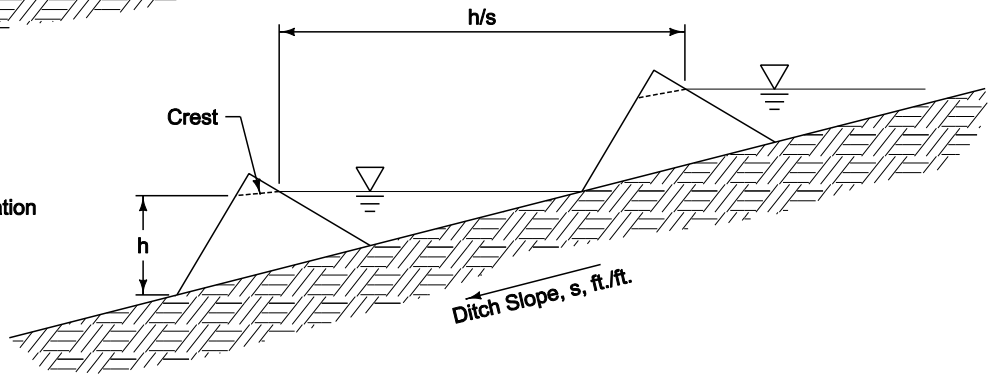

MANUFACTURED CHECK DAM

(Synthetic Permeable and Triangular Foam Check Dam)

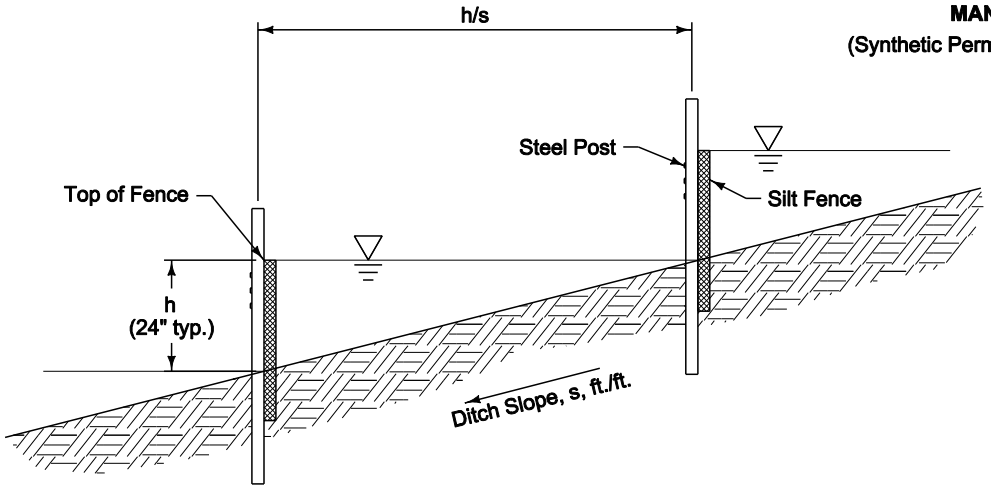

SILT FENCE CHECK DAM (DITCH CHECK)

(See Figure 9040.19 for installation of Silt Fence Ditch Checks.)

FIGURE 9040.6 | SHEET 1 OF 1

SUDAS

REVISION	
1	10-18-11

9040.6

SHEET 1 of 1

SUDAS Standard Specifications

CHECK DAM SPACING