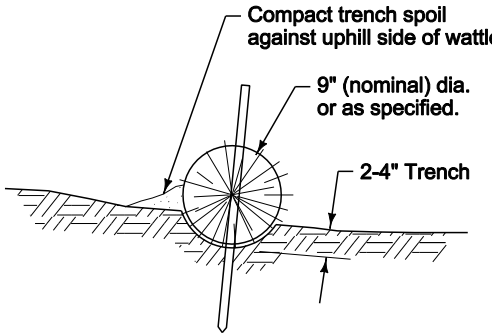

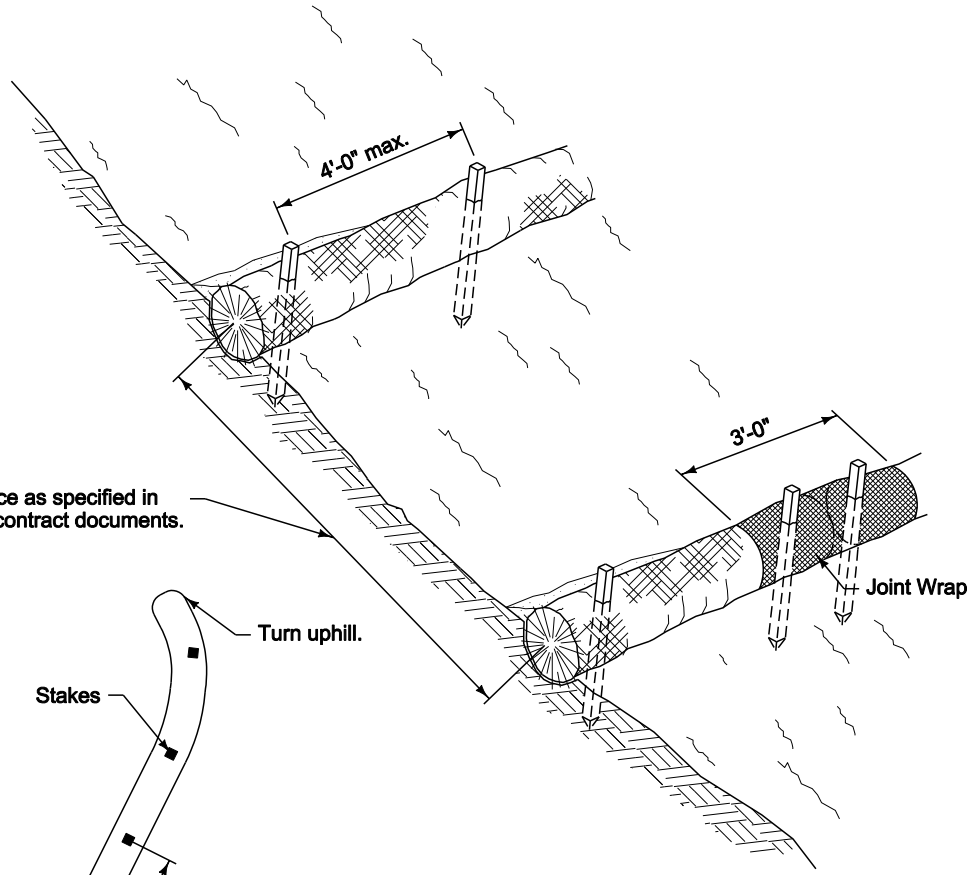

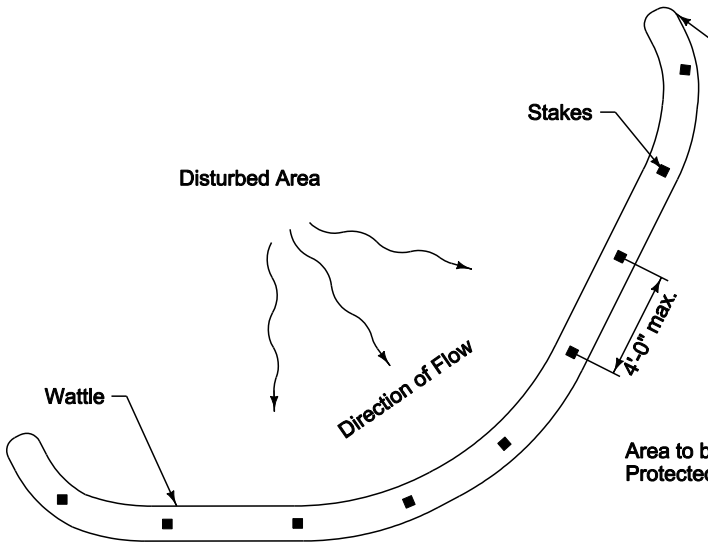

FIGURE 9040.5

SHEET 1 OF 1

SUDAS

REVISION	
1	10-18-11

9040.5

SHEET 1 of 1

SUDAS Standard Specifications

WATTLE