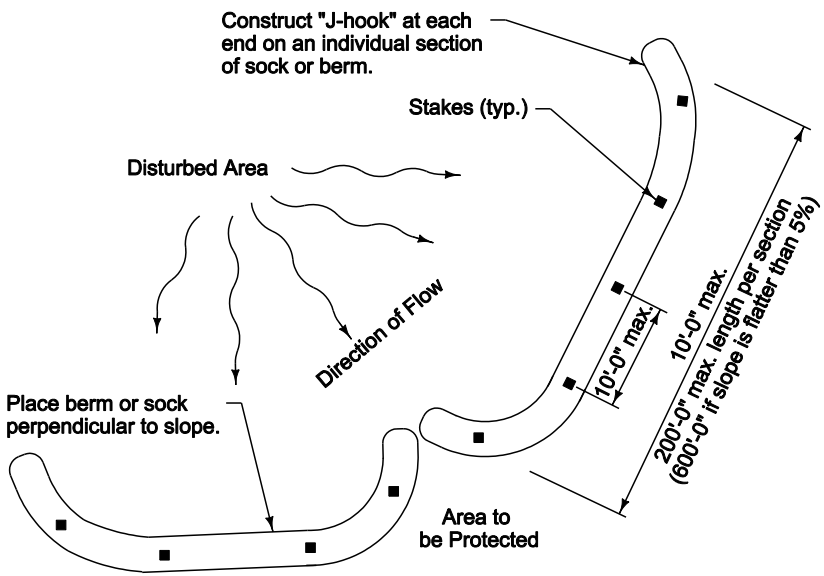

PLAN VIEW OF SLOPE
(for sediment and slope control)

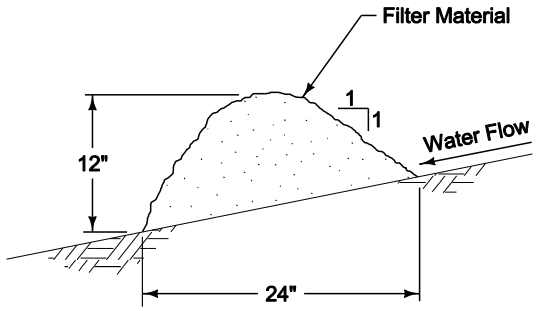

FILTER BERM

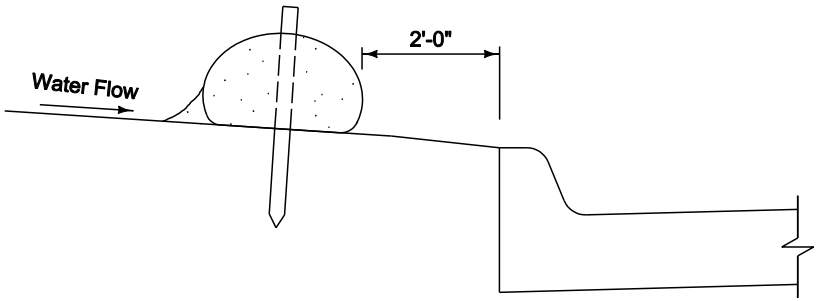

SECTION VIEW AT STREET
(for perimeter control along street)

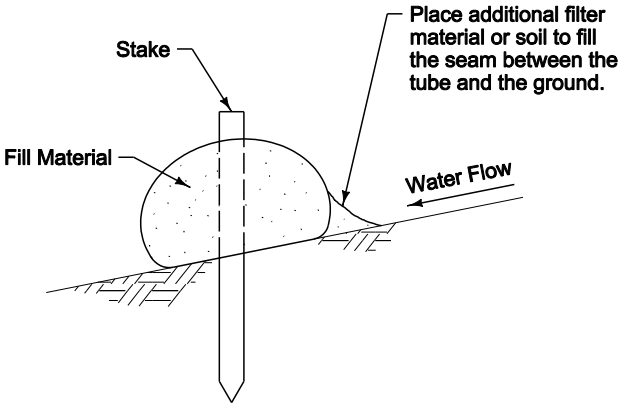

FILTER SOCK

Berm shown is typical for slopes flatter than 3:1. For steeper slopes, increase berm size as directed by the Engineer.

Place berm in uncompacted windrow perpendicular to the slope at locations specified in the contract documents.

Filter sock diameter as specified in the contract documents.

TYPICAL PLACEMENT OF BERM OR SOCK

FIGURE 9040.2 | SHEET 1 OF 1

SUDAS

REVISION	
1	10-18-11

9040.2

SHEET 1 of 1

SUDAS Standard Specifications

FILTER BERM AND FILTER SOCK