(1) Insert 12 inches of fabric a minimum of 6 inches deep (fabric may be folded below the ground line).

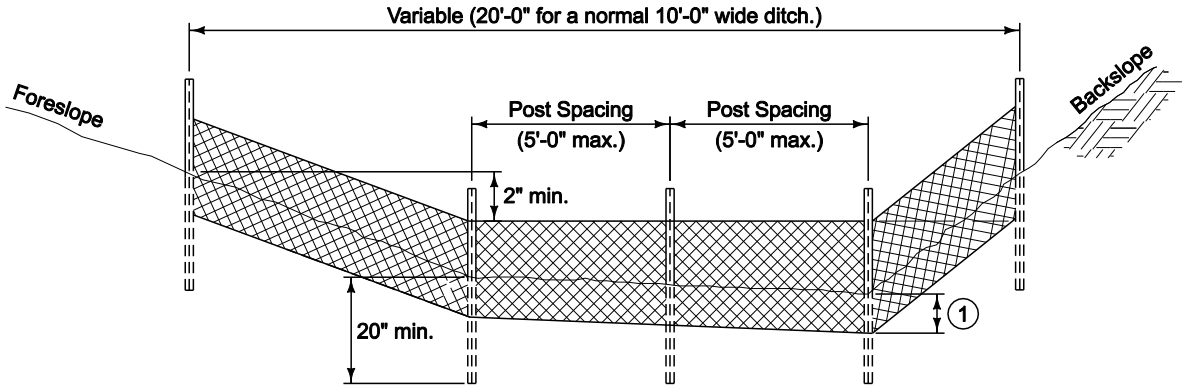

TYPICAL SILT FENCE DITCH CHECK

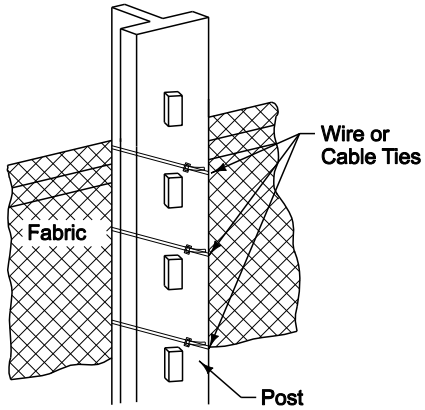

ATTACHMENT TO POST

FIGURE 9040.19 | SHEET 1 OF 2

SUDAS

REVISION	
1	10/18/11

9040.19

SHEET 1 of 2

SUDAS Standard Specifications

SILT FENCE

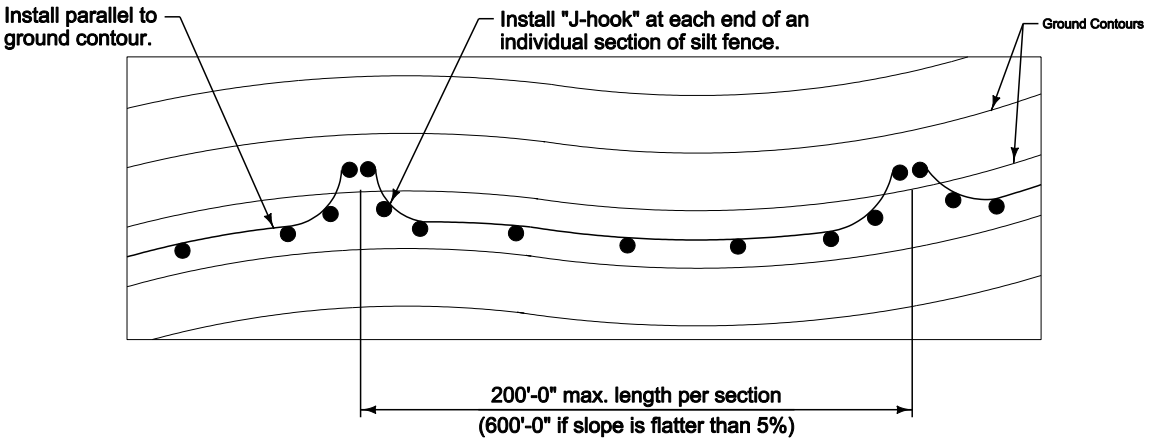

TYPICAL SILT FENCE INSTALLATION ON LONGITUDINAL SLOPES
(Plan View)

1. Insert 12 inches of fabric a minimum of 6 inches deep (fabric may be folded below the ground line).
2. Reduce post spacing to 5'-0" at water concentration areas, or as required to adequately support fence.

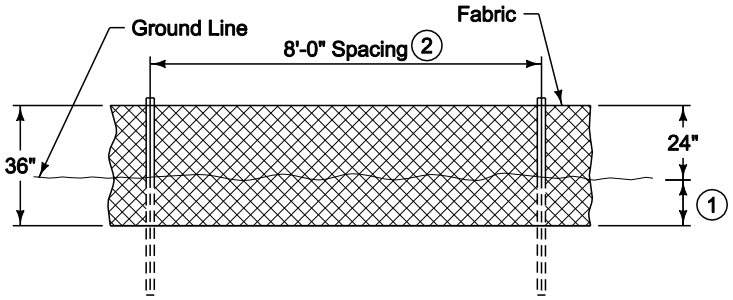

DETAILS OF SILT FENCE ON LONGITUDINAL SLOPES

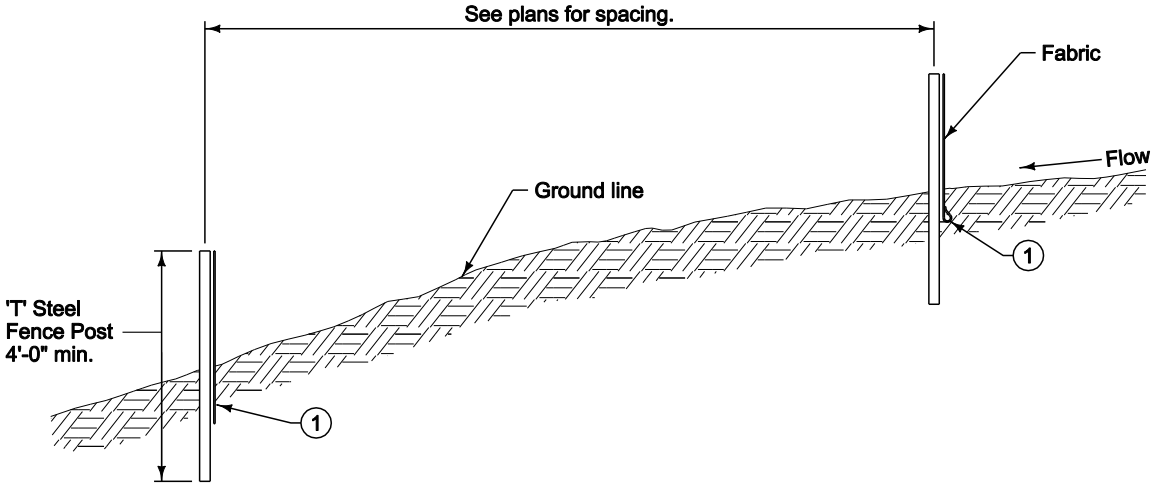

TYPICAL SILT FENCE INSTALLATION ON LONGITUDINAL SLOPES
(Profile View)

	REVISION	
SUDAS	1	10-18-11
	9040.19	
	SHEET 2 of 2	

SUDAS Standard Specifications

SILT FENCE

FIGURE 9040.19 | SHEET 2 OF 2