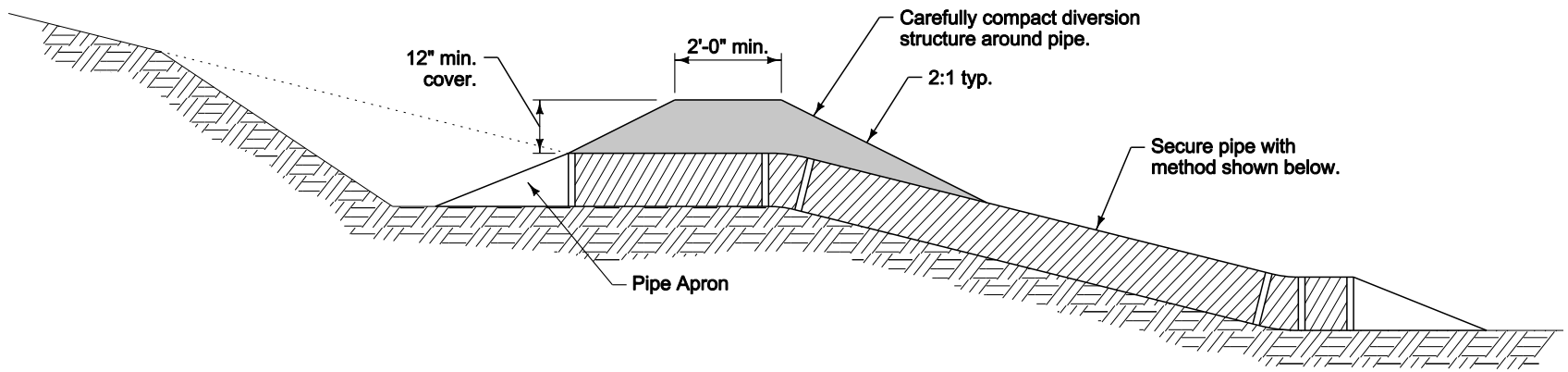

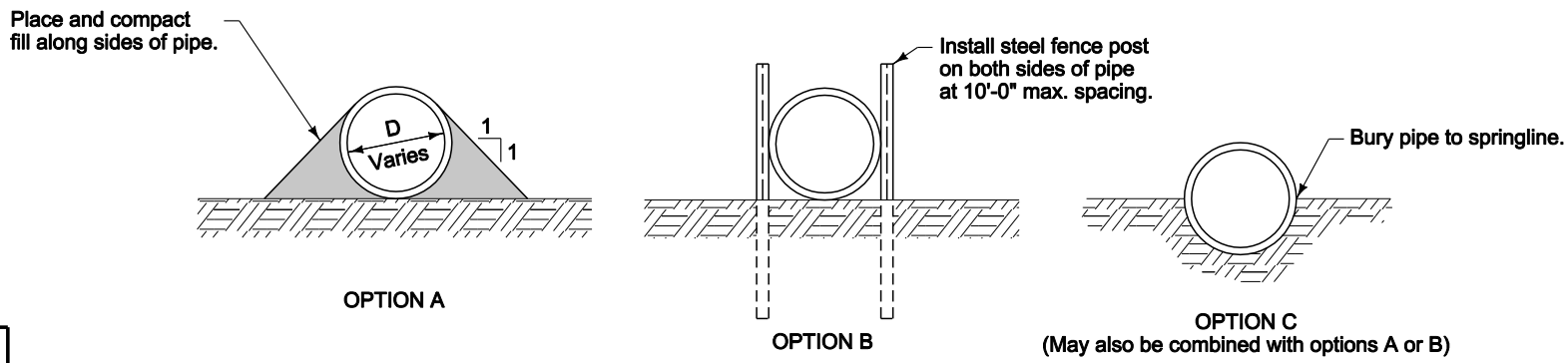

SLOPE DRAIN ANCHORING OPTIONS
(Options A, B, and C are interchangable unless otherwise specified in the contract documents)

FIGURE 9040.12 | SHEET 1 OF 1

SUDAS

REVISION	
1	10-18-11

9040.12

SHEET 1 of 1

SUDAS Standard Specifications

TEMPORARY PIPE SLOPE DRAIN