Length of cutoffwall to be back of curb to back of curb.

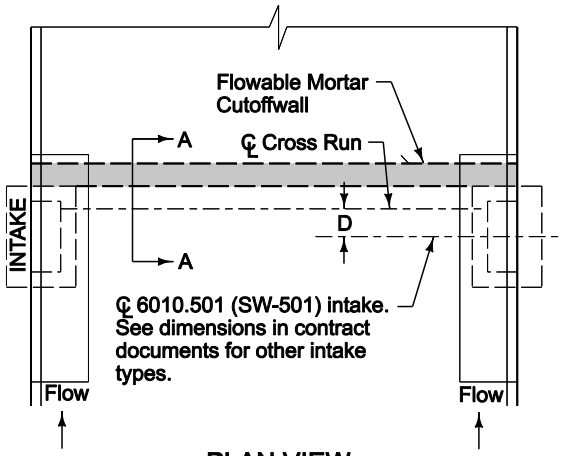

PLAN VIEW
(Flowable mortar cutoffwall and cross run location.)

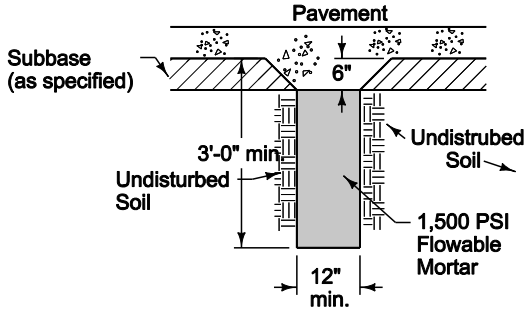

FLOWABLE MORTAR CUTOFFWALL
(Without Sewer)

DISTANCE FROM ℄ INTAKE TO ℄ CROSSRUN	
Size	D
15" RCP	0.7'
15" CMP	0.8'
18" RCP	0.5'
18" CMP	0.7'

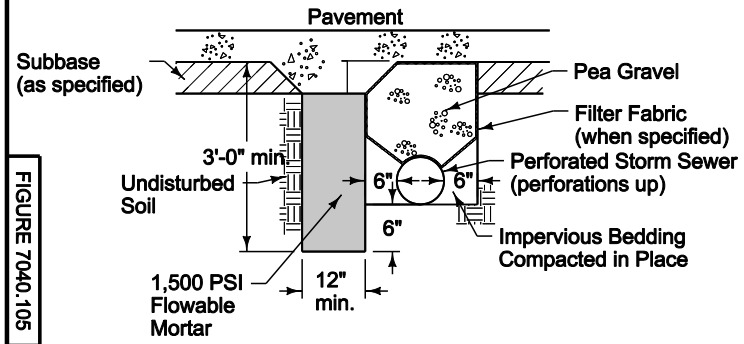

SECTION A-A
(Flowable mortar cutoffwall and storm sewer.)

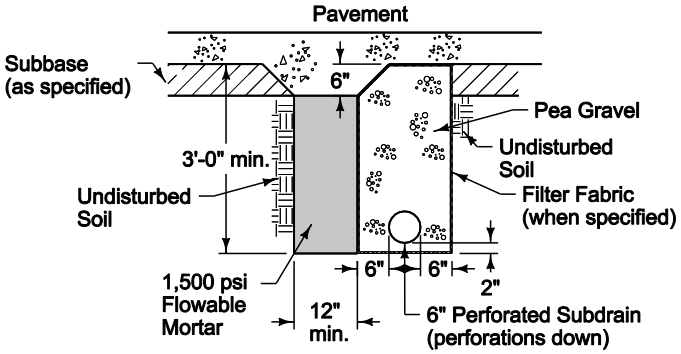

FLOWABLE MORTAR CUTOFFWALL
(With Subdrain)

SUDAS

REVISION	
New	10-19-10

7040.105

SHEET 1 of 1

SUDAS Standard Specifications

FLOWABLE MORTAR CUTOFFWALL

FIGURE 7040.105 | SHEET 1 OF 1