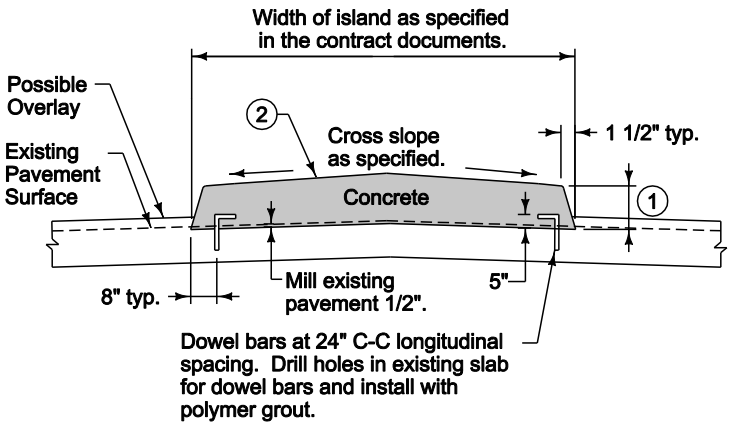

DOWELED MEDIAN

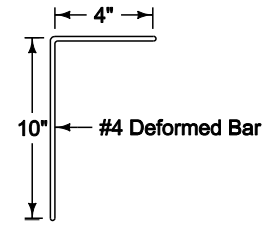

DOWEL BAR DETAIL

1. Median height as specified in the contract documents.
2. Construct 'C' joints at a maximum spacing of 15'. Match the joint pattern of the existing pavement. Install expansion joints as directed by the Engineer. Construct expansion joints with 1 inch expansion material. Seal all joints.

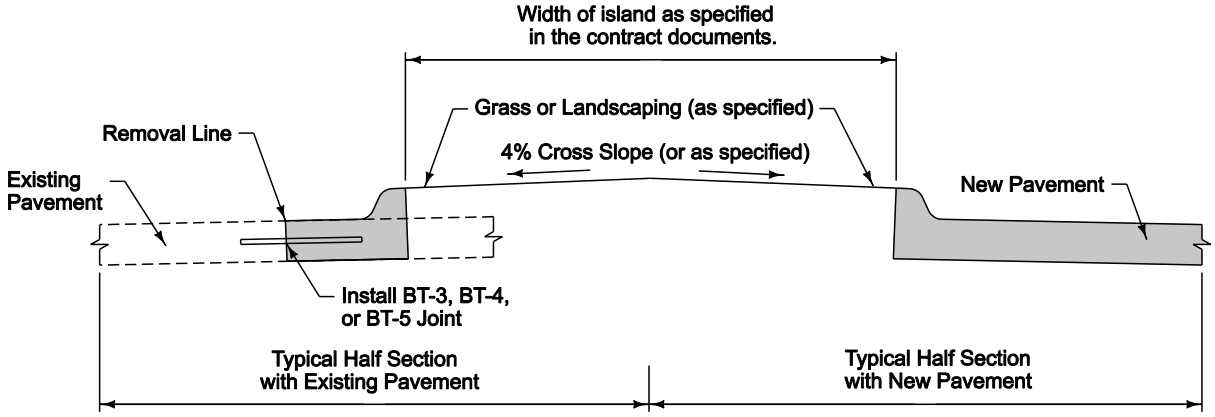

LANDSCAPE MEDIAN

FIGURE 7010.906 | SHEET 1 OF 1

SUDAS

REVISION	
New	10-19-10

7010.906

SHEET 1 of 1

SUDAS Standard Specifications

MEDIANS