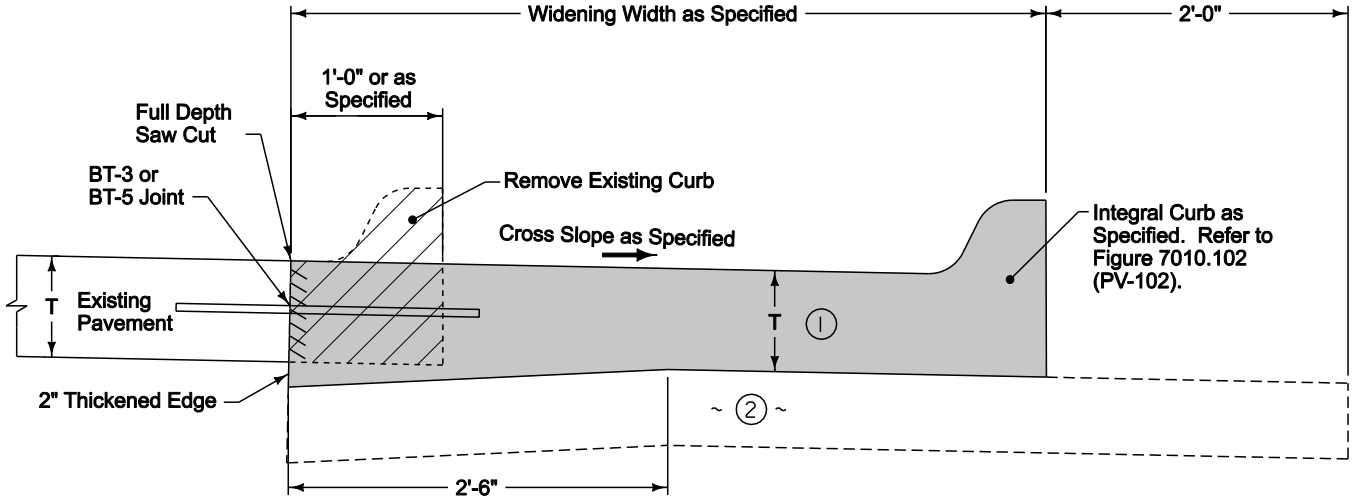

TYPICAL SECTION

1. Match existing pavement thickness or as specified in the contract documents.
2. Subgrade or subbase material as specified.
3. Existing C or CD joint.
4. Where existing joint spacing exceeds 20 feet, place joint at half way point.
5. If placing a joint at an existing crack results in a panel less than 6 feet long, do not place joint.
6. Match all existing expansion joints. Match existing C or CD joints where possible.

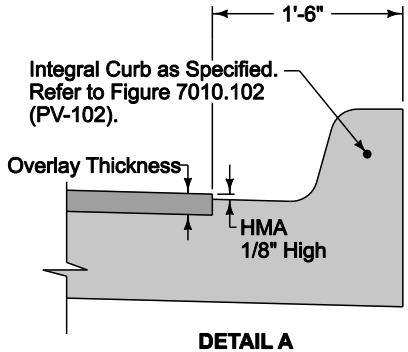

DETAIL A
(Curb for Widening with HMA Overlay)

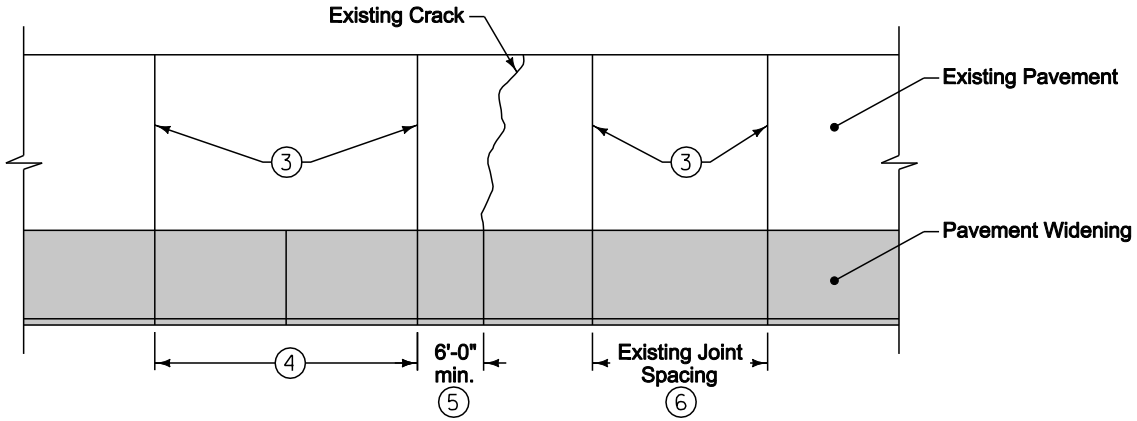

TYPICAL JOINT LAYOUT

SUDAS	REVISION: New 10-19-10
	7010.902
	SHEET 1 of 1

SUDAS Standard Specifications

PCC PAVEMENT WIDENING

FIGURE 7010.902 | SHEET 1 OF 1