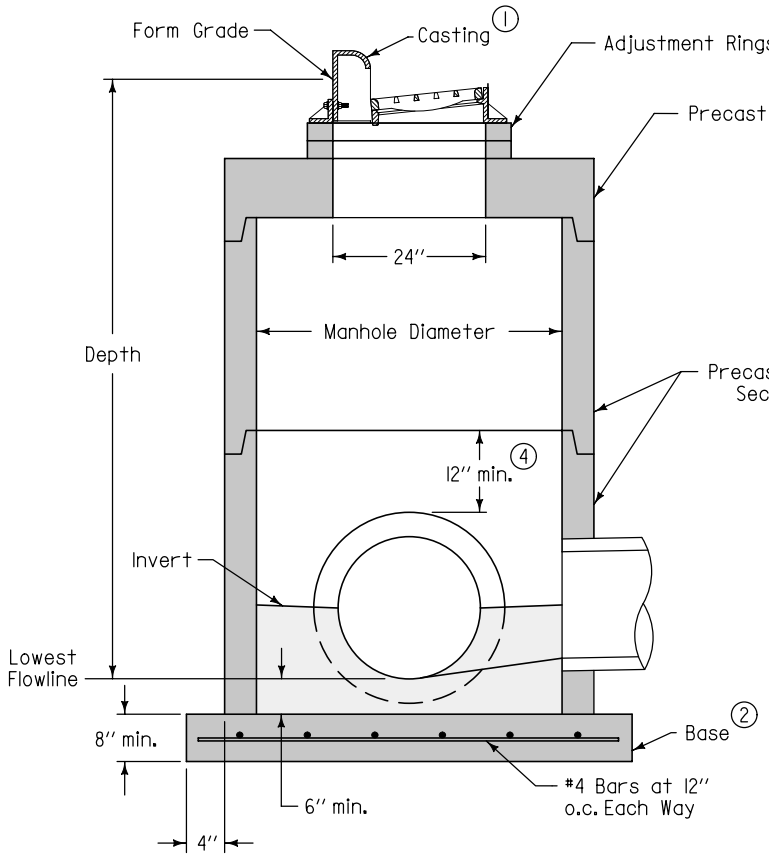

TYPICAL SECTION

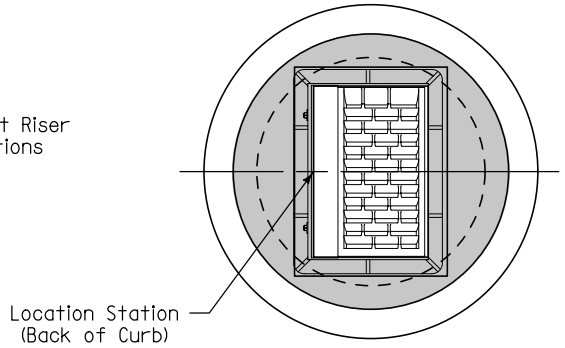

PLAN

1. SW-603 Type R unless Type Q is specified in the contract documents.
2. Cast-in-place base shown. Base may be square. If base is precast integral with walls, the footprint of the base is not required to extend beyond the outer edge of the walls.
3. For additional configurations, maintain a minimum of 12 inches of concrete between vertical edges of pipe openings.
4. 12 inch minimum riser height above all pipes.

Manhole Diameter (inches)	Maximum Pipe Diameter (3) (inches) for 2 Pipes	
	at 180° Separation	at 90° Separation
48	24	18
60	36	24
72	42	30
84	48	36
96	60	42

SUDAS | Iowa Department of Transportation | REVISION NEW 04-21-09

FIGURE 6010.502 | STANDARD ROAD PLAN | SW-502 | SHEET 1 of 1

REVISIONS: New. Replaces SUDAS Type "M-B" Intake.

SUDAS DIRECTOR | Deanna Maifield DESIGN METHODS ENGINEER

CIRCULAR SINGLE GRATE INTAKE

FIGURE 6010.502 SHEET 1 OF 1