① Extend tracer wire up fire hydrant barrel to internal terminals of tracer wire station and back down. Refer to WM-201 for details of fire hydrant assembly.

② Clamp tracer wire to ground rod at system termination points.

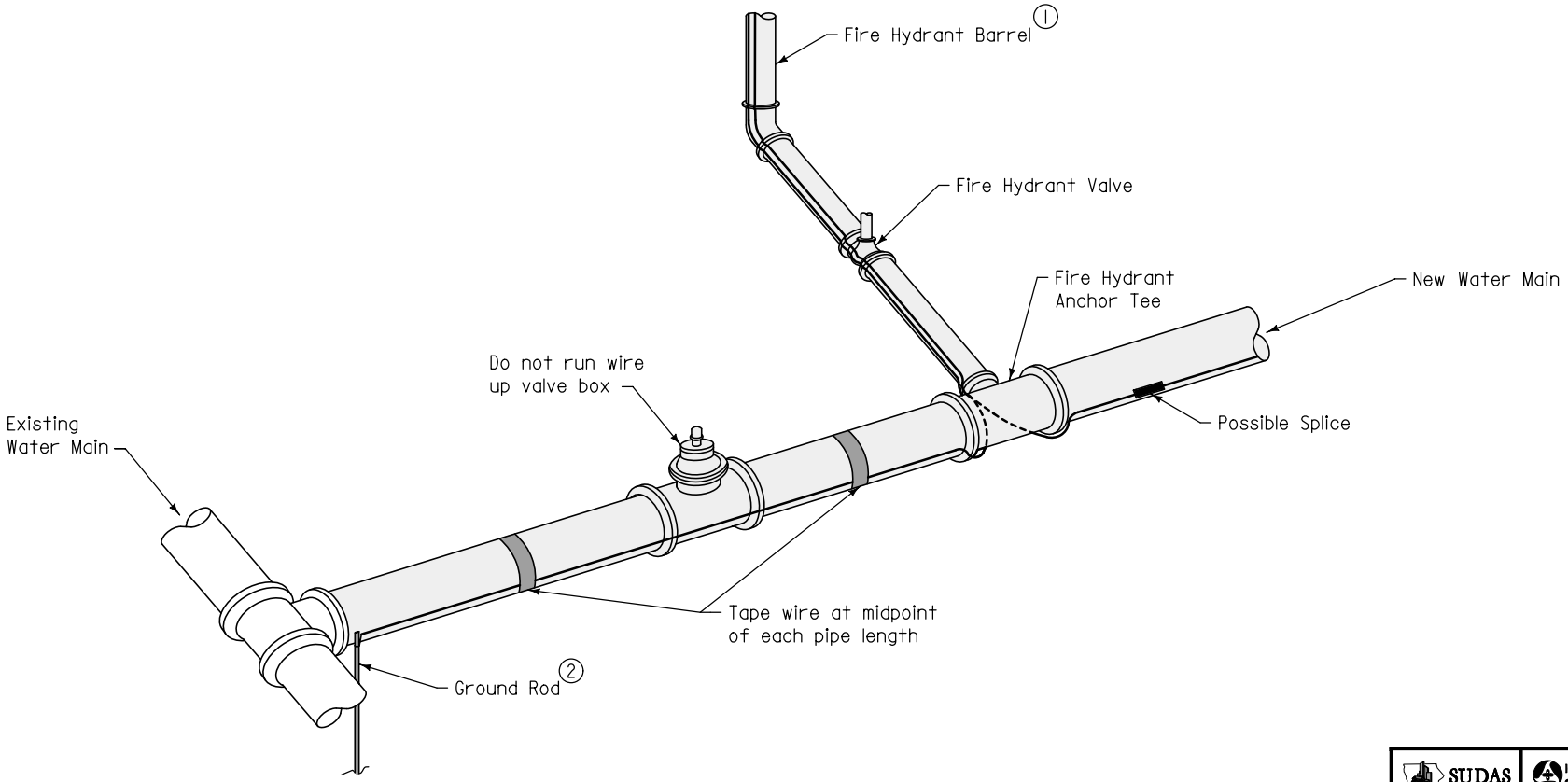

TYPICAL INSTALLATION

SUDAS	Iowa Department of Transportation	REVISION NEW 04-21-09
FIGURE 5010.102	STANDARD ROAD PLAN	WM-102 SHEET 1 of 1

REVISIONS: New. Replaces SUDAS Figure 5010.3

SUDAS DIRECTOR — DESIGN METHODS ENGINEER

TRACER SYSTEM

FIGURE 5010.102 SHEET 1 OF 1