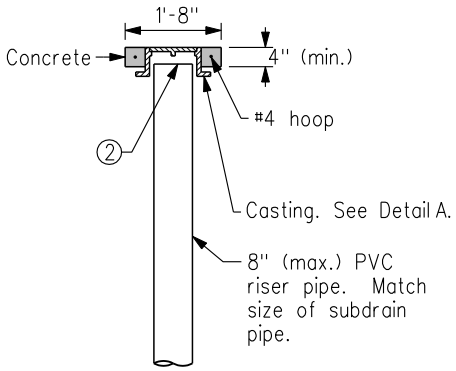

TYPE A-1 CLEANOUT

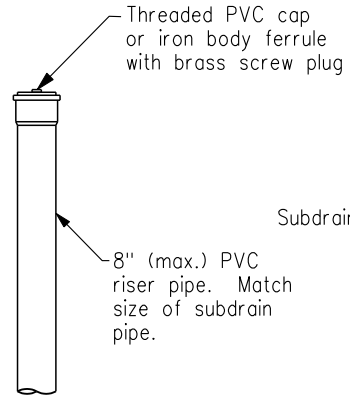

TYPE A-2 CLEANOUT
(Non-traffic areas only)

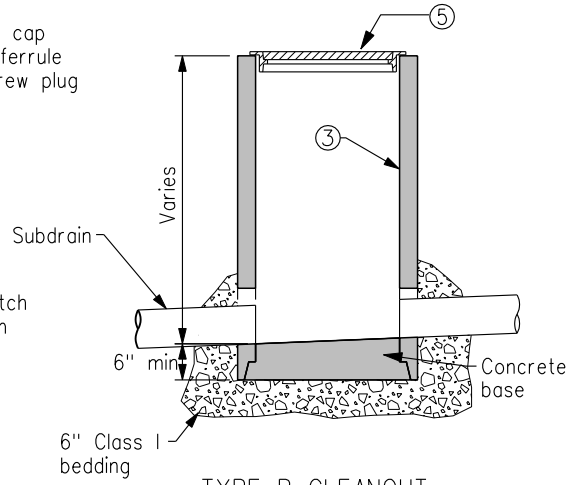

TYPE B CLEANOUT
(Non-traffic areas only)

1. Heavy duty casting. Mark lid with "Storm" or "Storm C.O."
2. Do not allow casting to bear on top of riser pipe; provide 2 inch clearance, minimum.
3. 24 inch diameter RCP for subdrain 8 inches or smaller; 30 inch diameter RCP for 10 to 12 inch subdrain. A manufactured cleanout may be used in lieu of a Type B cleanout, if approved by the Engineer.
4. Design is intended for use in conjunction with 8 inch PVC riser pipe. Other sized caps may be used with smaller pipe, as approved by the Engineer.
5. Provide Type G casting, as required to fit pipe size.

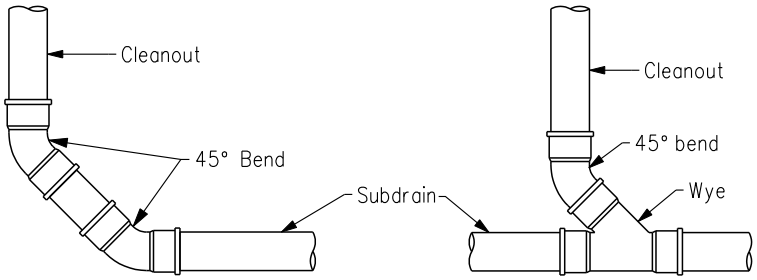

END OF RUN IN-LINE

TYPE A CLEANOUT CONNECTIONS

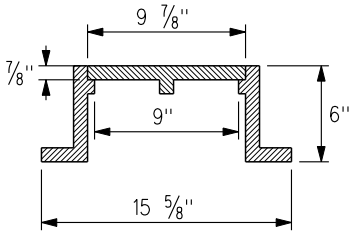

DETAIL A 1 4
(Dimensions are nominal)

FIGURE 4040.232 SHEET 1 OF 1

SUDAS

REVISION	
NEW	10/21/08

FIGURE 4040.232

SHEET 1 OF 1

SUBDRAIN CLEANOUTS