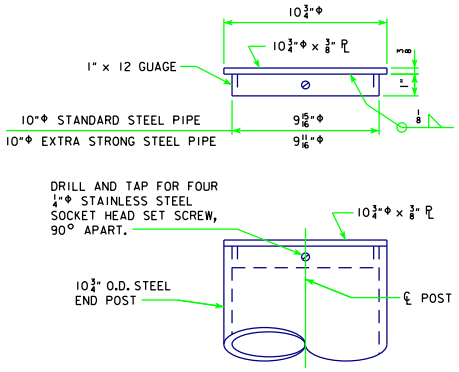

END POST TOP DETAIL

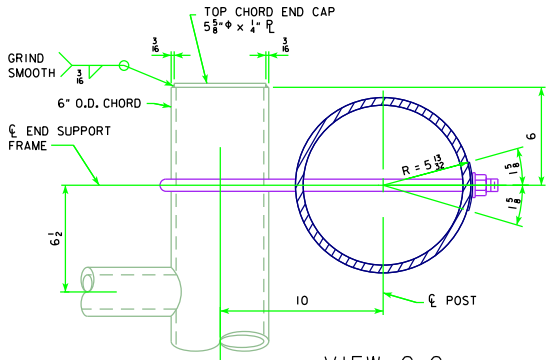

VIEW C-C

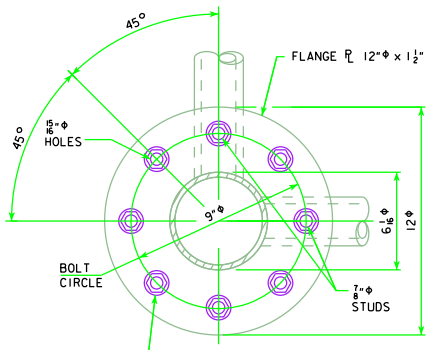

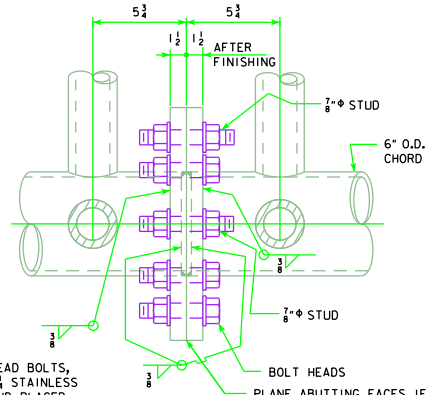

7/8"Φ x 4 3/4 STAINLESS STEEL HEXAGONAL HEAD BOLTS, 24 REQUIRED PER TRUSS SPLICE, 7/8"Φ x 6 1/4 STAINLESS STEEL STUDS THREADED 2" FROM EACH END, PLACED AT HORIZONTAL MEMBERS, 8 REQUIRED PER TRUSS SPLICE. 64 WASHERS REQUIRED PER TRUSS SPLICE. 40 STAINLESS STEEL 7/8" REGULAR HEX NUTS & JAM NUTS REQUIRED PER TRUSS SPLICE. DRILL EIGHT (8) 15/16" DIA. HOLES IN EACH FLANGE. TORQUE 7/8"Φ BOLTS TO 200 ft-lb.

CHORD SPLICE

NOTE:
FLANGES MAY BE WELDED TO CHORD MEMBERS AFTER FINISHING PROVIDED PROPER ALIGNMENT IS SECURED.

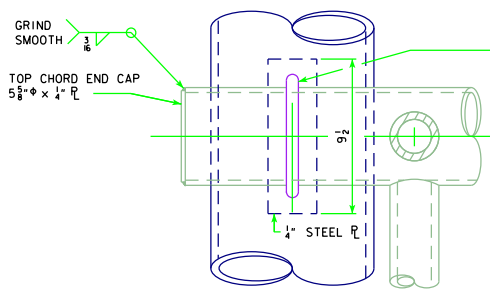

VIEW B-B

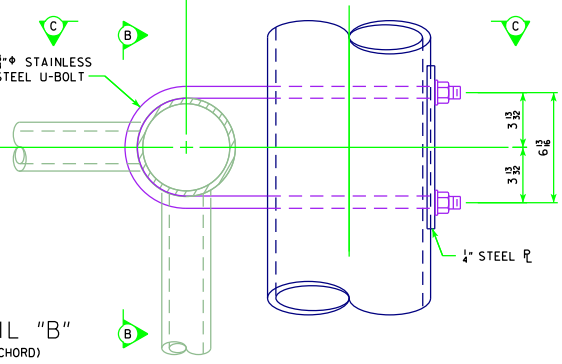

DETAIL "B"
(TOP CHORD)

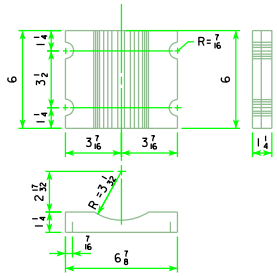

ALUMINUM SADDLE SHIM DETAIL

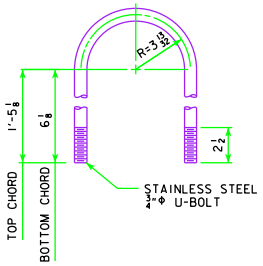

STAINLESS STEEL U-BOLT DETAIL

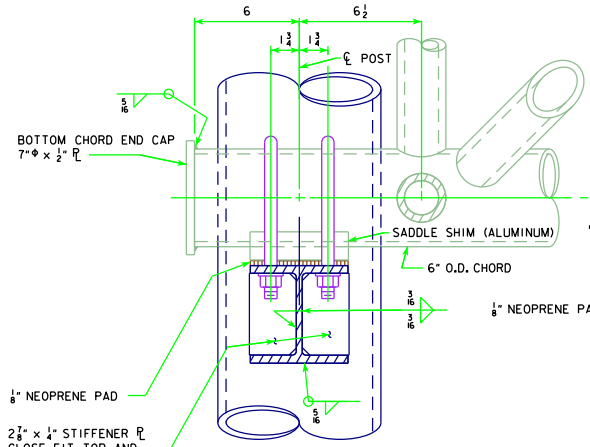

VIEW D-D

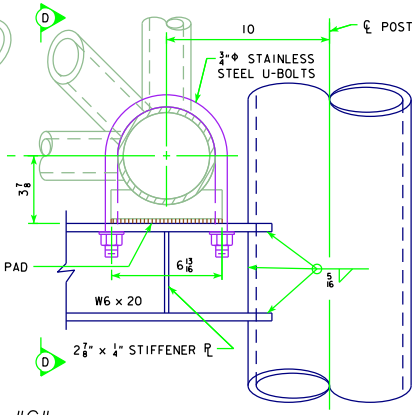

DETAIL "C"
(BOTTOM CHORD)

NOTE: SEE STD. SHEET STOH-03-06 OR STOH-06-06 FOR LOCATION OF DETAILS "B" & "C".

LATEST REVISION DATE	APPROVED BY BRIDGE ENGINEER	Iowa Department of Transportation Highway Division	
		STANDARD DESIGN ALUMINUM OVERHEAD SIGN TRUSS WITH GALVANIZED STEEL SUPPORTS FEBRUARY, 2006	
		TRUSS SUPPORT AND CHORD SPLICE DETAILS 50' TO 100' SPANS	STOH-08-06