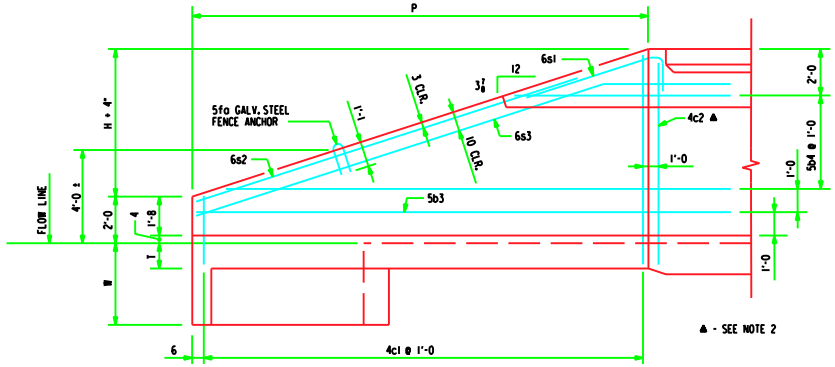

TYPICAL VIEW - FRONT FACE REINFORCING

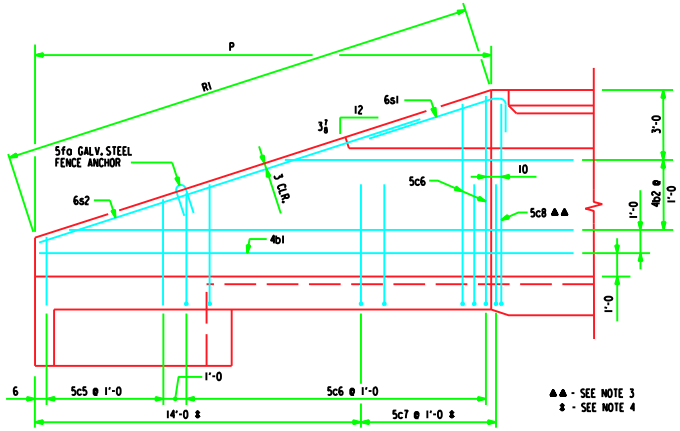

TYPICAL VIEW - BACK FACE REINFORCING

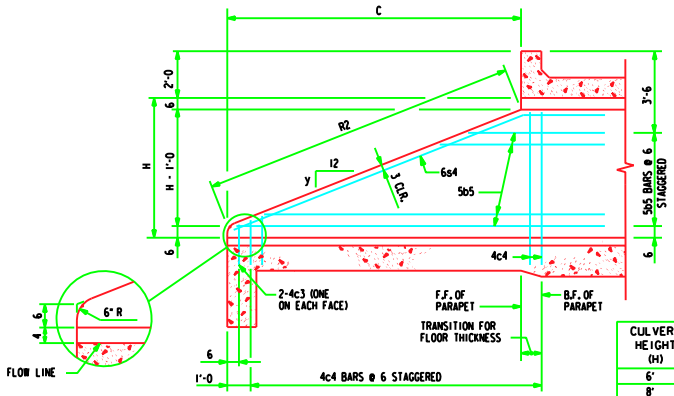

CULVERT HEIGHT (H)	SLOPE y INCHES
6'	4 3/4
8'	5 1/4
10'	5 1/2
12'	5 3/4

TYPICAL VIEW - CENTER WALL

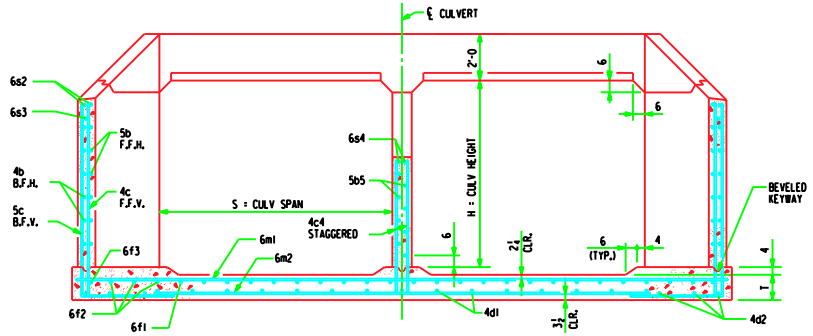

TYPICAL SECTION - NEAR CENTER OF APRON

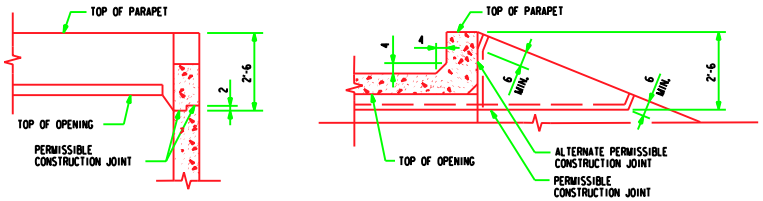

TOP OF WINGWALL DETAILS

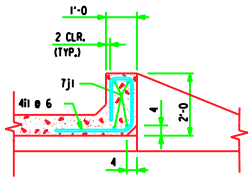

SECTION THRU PARAPET

NOTES :

1. BAR SPACINGS AND POSITIONS SHOWN ARE SIMILAR FOR ALL SIZES OF HEADWALLS IN THIS STANDARD.
2. ONE 4c2 BAR, HEADWALL HEIGHTS OF H=6', H=8', H=10' AND TWO 4c2 BARS, HEADWALL HEIGHT OF H=12'.
3. ONE 5c8 BAR, HEADWALL HEIGHTS OF H=6', H=8', H=10' AND TWO 5c8 BARS, HEADWALL HEIGHT OF H=12'.
4. NOT APPLICABLE TO HEADWALL HEIGHT OF H=6'.
5. FOR DIMENSION TABLE SEE DRAWING TWH 0-1-87.

LATEST REVISION DATE : 1-1-98

APPROVED BY :

STANDARD DESIGN

FLARED WING HEADWALLS

FOR

TWIN REINFORCED CONCRETE BOX CULVERTS

IOWA DEPARTMENT OF TRANSPORTATION - HIGHWAY DIVISION

JULY , 1987

TWH 0-3-87

REVISED 1/98; CLEAR DISTANCE TO 4i1 BAR CHANGED.
TWH 0-3-87