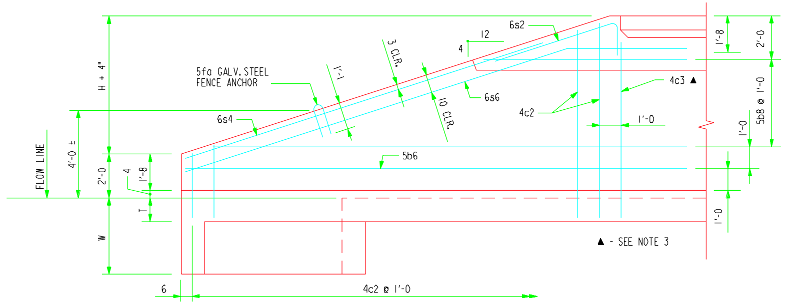

TYPICAL VIEW - FRONT FACE REINFORCING SHORT WINGWALL

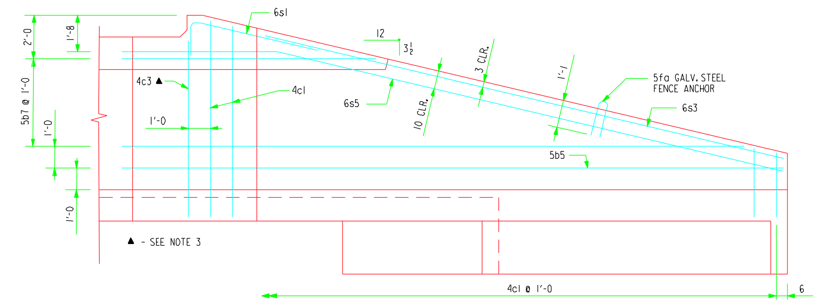

TYPICAL VIEW - FRONT FACE REINFORCING LONG WINGWALL

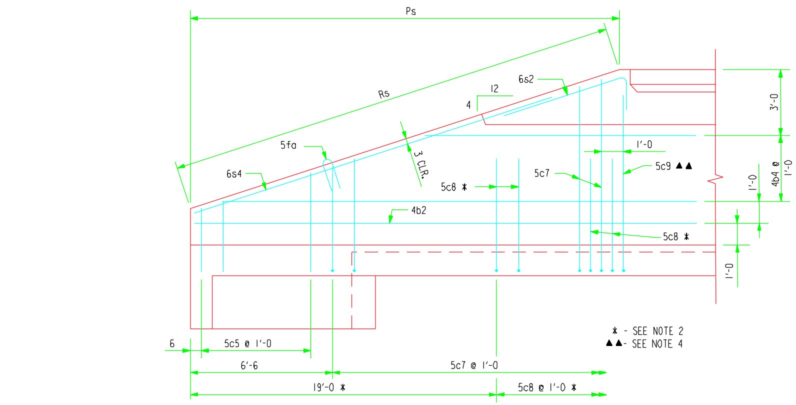

TYPICAL VIEW - BACK FACE REINFORCING SHORT WINGWALL

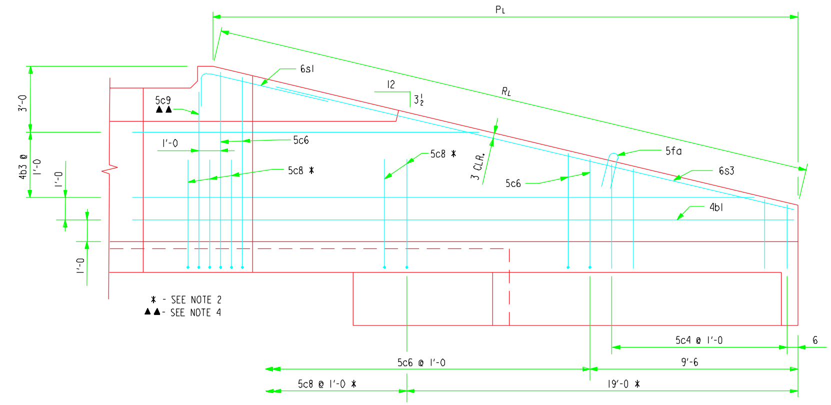

TYPICAL VIEW - BACK FACE REINFORCING LONG WINGWALL

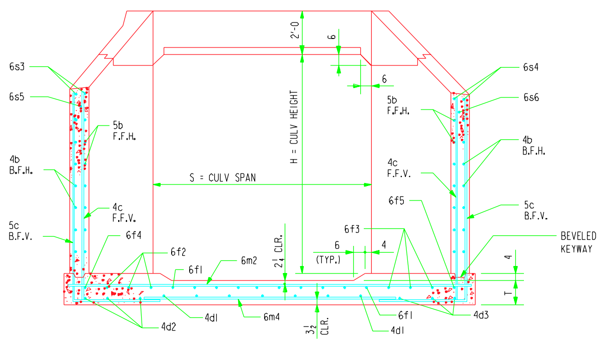

TYPICAL SECTION - NEAR CENTER OF APRON

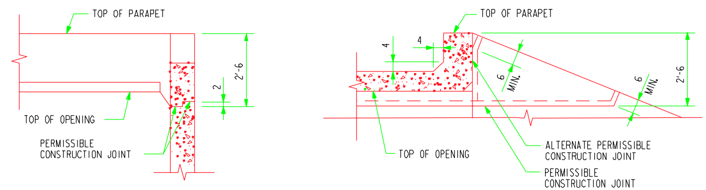

TOP OF WINGWALL DETAILS

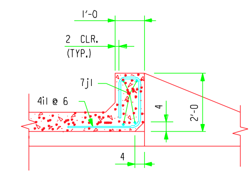

SECTION THRU PARAPET

NOTES :

1. BAR SPACINGS AND POSITIONS SHOWN ARE SIMILAR FOR ALL SIZES OF HEADWALLS IN THIS STANDARD.
2. NOT APPLICABLE TO HEADWALL HEIGHTS OF H=3', H=4', H=5' AND H=6'.
3. TWO 4c3 BARS - LONG WINGWALL, ONE 4c3 BAR - SHORT WINGWALL.
4. TWO 5c9 BARS - LONG WINGWALL, ONE 5c9 BAR - SHORT WINGWALL.
5. FOR DIMENSION TABLE SEE DWG. FWH 15-4-87.

LATEST REVISION DATE : 1-1-98

APPROVED BY : William A. Lundquist

STANDARD DESIGN

FLARED WING HEADWALLS

FOR
REINFORCED CONCRETE BOX CULVERTS

HIGHWAY DIVISION
IOWA DEPARTMENT OF TRANSPORTATION

MAY , 1987

FWH 15-6-87

REVISED 1/98; CLEAR DISTANCE TO 4I1 BAR CHANGED.
REVISED : 12/96 ; KEYWAY NOTATION CHANGED.
FWH156.S01

XXXXXXXXXXSYSTEMTIME XXXXXXXUSERNAME XXXXXXXXXXXXXXXXXXXXXXXXXXXXXXXXXXXXXXXXXXXXXXXXXXXXXXXXXXXXXXDGNSPEC