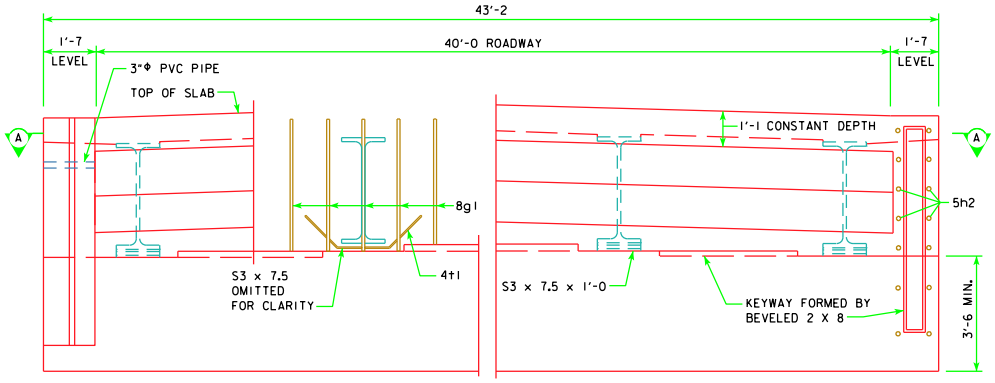

PART REAR ELEVATION AT ABUTMENT

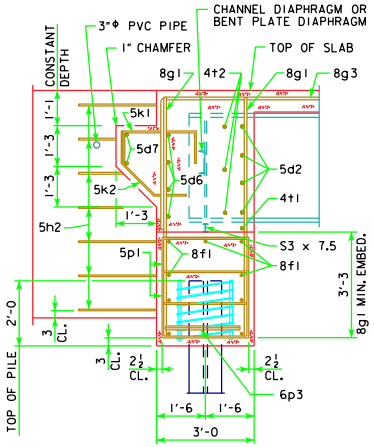

PART SECTION B-B

NOTES:
1. HOLES DRILLED THROUGH BEAM WEB FOR 5d2 AND 4t2 BARS.
2. THE SPIRAL AT THE TOP OF EACH PILE TO BE 7 TURNS OF No. 2 BAR, 21" DIAMETER, 3" PITCH WITH 3 - $L\frac{7}{8} \times \frac{7}{8} \times \frac{1}{8}$ SPACERS PUNCHED TO HOLD SPIRAL.

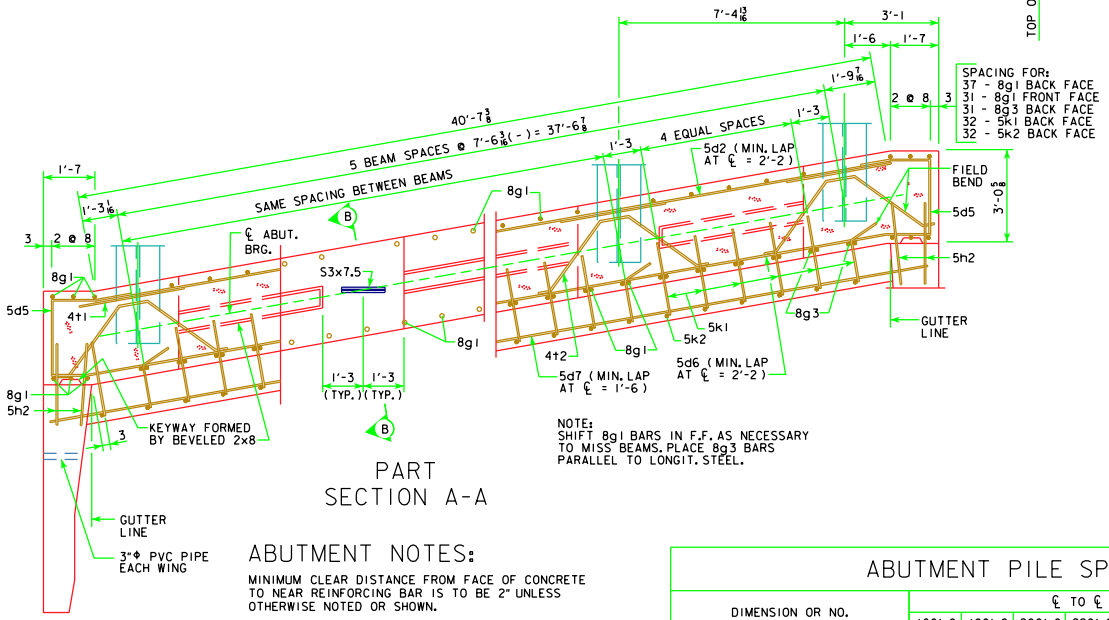

NOTE:
SHIFT 8g1 BARS IN F.F. AS NECESSARY TO MISS BEAMS. PLACE 8g3 BARS PARALLEL TO LONGIT. STEEL.

PART SECTION A-A

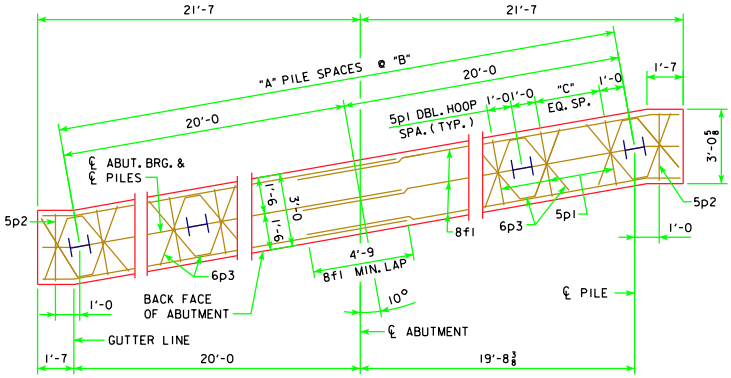

ABUTMENT PILE PLAN

NOTE:
ABUTMENT STEP DIAGRAM PROVIDED BY DESIGNER, SEE "ESTIMATED BRIDGE QUANTITIES" SHEET.

ABUTMENT NOTES:

MINIMUM CLEAR DISTANCE FROM FACE OF CONCRETE TO NEAR REINFORCING BAR IS TO BE 2" UNLESS OTHERWISE NOTED OR SHOWN.

IF NECESSARY TO PREVENT DAMAGE TO THE END OF THE BRIDGE DECK OR BACKWALL FROM CONSTRUCTION EQUIPMENT, AN APPROPRIATE METHOD OF PROTECTION APPROVED BY THE ENGINEER SHALL BE PROVIDED BY THE BRIDGE CONTRACTOR AT NO EXTRA COST TO THE COUNTY OR STATE.

ABUTMENT PILES ARE TO BE DRIVEN TO THE DESIGN BEARING VALUE AS GIVEN IN THE ABUTMENT PILE SPACING TABLE.

PLACE 5h2 BAR AT 1:6 SLOPE TO MATCH TRAFFIC SIDE OF ABUTMENT WING FACE. (BOTH SIDES TYPICAL)

BARRIER RAIL NOT SHOWN IN DETAILS.

ABUTMENT PILE SPACING

DIMENSION OR NO.	℄ TO ℄ ABUTMENT BEARING								
	160'-0	180'-0	200'-0	220'-0	240'-0	260'-0	280'-0	300'-0	320'-0
"A"	7	7	7	8	8	8	9	9	9
"B" (FT-IN)	5'-8 9/16	5'-8 9/16	5'-8 9/16	5'-0	5'-0	5'-0	4'-5 5/16	4'-5 5/16	4'-5 5/16
"C" EQUAL SPACES	4	4	4	3	3	3	3	3	3
NO. OF PILES PER ABUT.	8	8	8	9	9	9	10	10	10
① DESIGN PILE LOAD (TONS)	45	48	50	46	47	49	45	47	48
② STRENGTH I DESIGN LOAD (KIPS)	131	138	144	132	137	143	132	136	138

NOTE: HP 10 x 57 STEEL BEARING PILING REQUIRED.
① FOR DETERMINING ACTUAL PILE LENGTHS IN FIELD.
② FOR ESTIMATING PILE LENGTHS USING AASHTO LRFD SPECIFICATIONS.

LATEST REVISION DATE

APPROVED BY BRIDGE ENGINEER

Iowa Department of Transportation
Highway Division

STANDARD DESIGN - 40' ROADWAY, 3 SPAN BRIDGES

ROLLED STEEL BEAM BRIDGES

JUNE, 2010

ABUTMENT DETAILS
10° SKEW

RS40-009-10