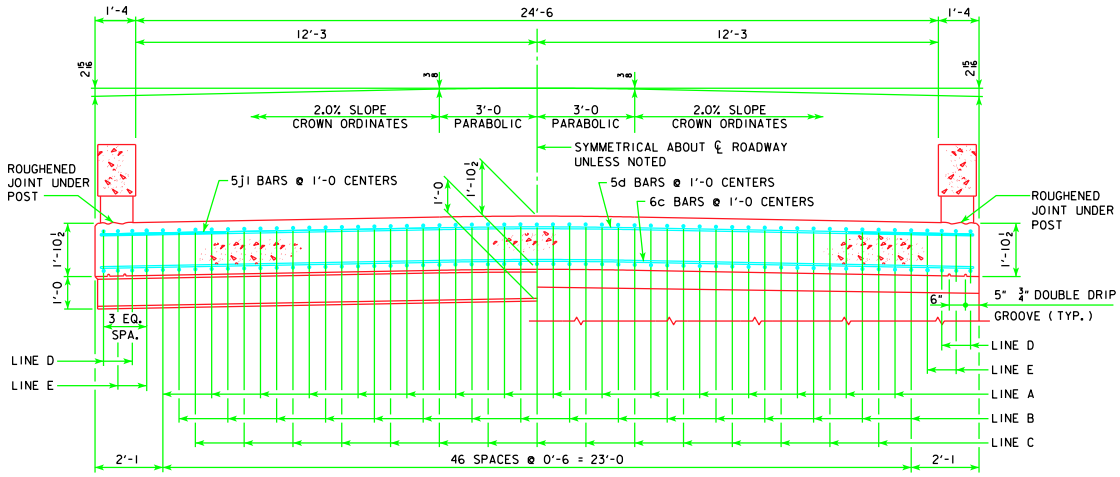

HALF SECTION NEAR PIER HALF SECTION NEAR ABUTMENT

SLAB CROSS-SECTIONAL AREA FOR OPEN RAIL = 50.94 SQ. FT.

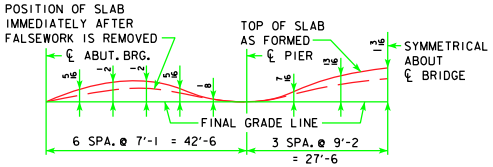

FORM CAMBER DIAGRAM

THIS DIAGRAM SHOWS THE FORM CAMBER REQUIRED TO COMPENSATE FOR THE ANTICIPATED ULTIMATE DEAD LOAD DEFLECTION. THE ABOVE DIMENSIONS DO NOT INCLUDE ANY ALLOWANCE FOR FORM DEFLECTION OR FALSEWORK SETTLEMENT.

NOTE:
TOP LONGITUDINAL REINFORCING STEEL IS TO BE PARALLEL TO AND 2½" CLEAR BELOW TOP OF SLAB. BOTTOM LONGITUDINAL REINFORCING STEEL IS TO BE PARALLEL TO AND 1½" CLEAR ABOVE BOTTOM OF SLAB. REINFORCING STEEL IS TO BE SECURELY WIRED IN PLACE AND ADEQUATELY SUPPORTED ON METAL BAR CHAIRS BEFORE CONCRETE IS PLACED.

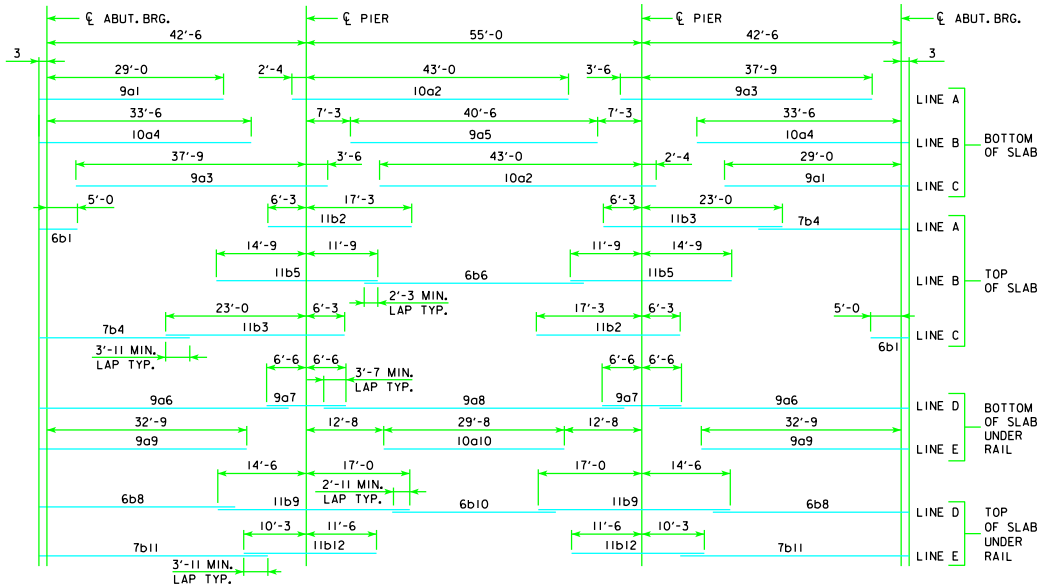

PLACEMENT FOR LONGITUDINAL REINFORCEMENT

12-08 LATEST REVISION DATE	APPROVED BY BRIDGE ENGINEER	Iowa Department of Transportation Highway Division
		STANDARD DESIGN - 24' ROADWAY, 3 SPAN BRIDGES CONTINUOUS CONCRETE SLAB BRIDGES NOVEMBER, 2006
		SUPERSTRUCTURE DETAILS 140'-0 BRIDGE — J24-16-06

REVISED 12-08 - CHANGED DISTANCE OF END OF REBAR TO ℄ OF ABUTMENT BEARING FROM 1'-4 TO 3 INCHES.