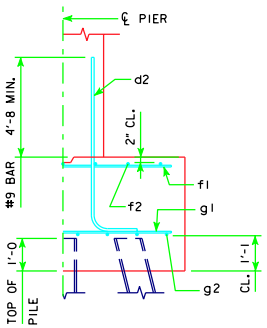

TYPICAL SECTION

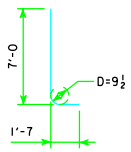

d2

NOTE: D = PIN DIAMETER.
DIMENSIONS ARE OUT TO OUT.

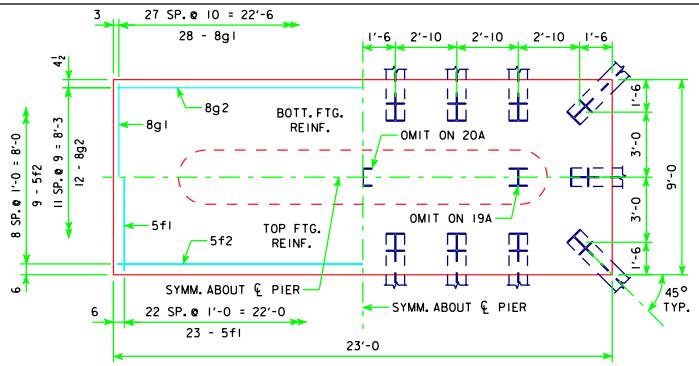

3'-6 x 9'-0 x 23'-0 FOR 19A, 20A & 21A

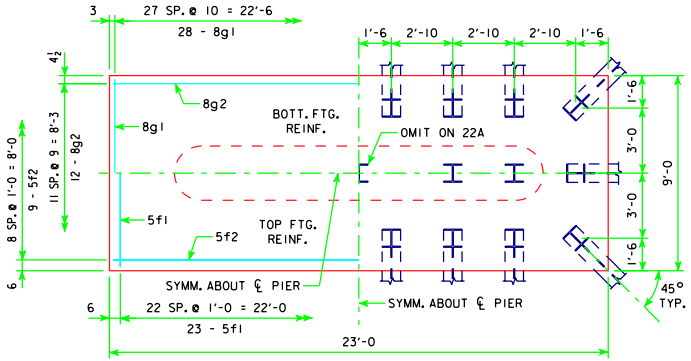

3'-6 x 9'-0 x 23'-0 FOR 22A & 23A

H IN FT.	℄ - ℄ ABUT. BRG.	PILING (HP10x57) NO. & LAYOUT	① DES. BRG. (TONS)	② LRFD DES. BRG. (KIPS)	FOOTING SIZE
16 TO 18	201'-4	19A	50	145	3'-6 x 9' x 23'
	213'-10	20A	49	141	
	226'-4	21A	50	144	
	243'-0	22A	50	144	
19 TO 21	201'-4	20A	48	139	3'-6 x 9' x 23'
	213'-10	20A	50	144	
	226'-4	21A	50	146	
	243'-0	23A	50	143	
22 TO 24	201'-4	20A	49	141	3'-6 x 9' x 23'
	213'-10	20A	50	146	
	226'-4	22A	50	143	
	243'-0	23A	50	145	

FOOTING SIZE	REINFORCING STEEL (ONE FOOTING) BAR	NO., SIZE & SPACING	LENGTH	WEIGHT (LB.)	TOTAL WEIGHT (LB.)	STRUCTURAL CONCRETE (CY)
3'-6 x 9' x 23'	d2	44 - #9 AS SHOWN	8'-7	1284	3079	26.8
	f1	23 - #5 @ 1'-0	8'-8	208		
	f2	9 - #5 @ 1'-0	22'-8	213		
	g1	28 - #8 @ 0'-10	8'-8	648		
	g2	12 - #8 @ 0'-9	22'-8	726		

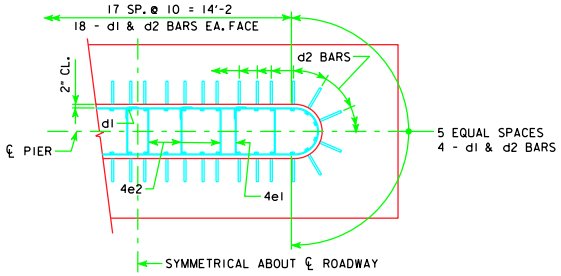

d2 BAR LAYOUT
(SEE SECTION A-A ON SHEET H40-57-06.)

① FOR DETERMINING ACTUAL PILE LENGTHS IN FIELD.

② FOR ESTIMATING PILE LENGTHS USING AASHTO LRFD SPECIFICATIONS.

REVISED 10-09 - SHEET WAS REVISED TO MEET LRFD SPECIFICATIONS.

10-09
LATEST REVISION DATE

APPROVED BY BRIDGE ENGINEER

Iowa Department of Transportation
Highway Division

STANDARD DESIGN - 40' ROADWAY, THREE SPAN BRIDGE

PRETENSIONED PRESTRESSED CONCRETE BEAM BRIDGES

AUGUST, 2009

TEE PIER - 50 TON STEEL PILE FOOTINGS

0° SKEW - H=16' TO 24'

H40-59-06