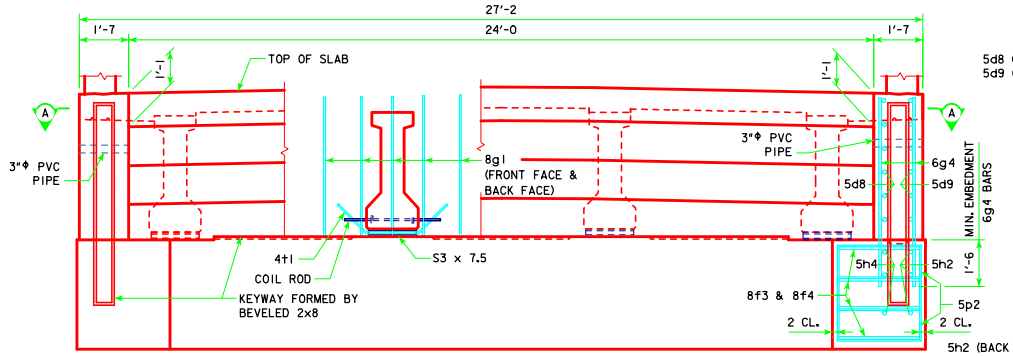

PART REAR ELEVATION AT ABUTMENT

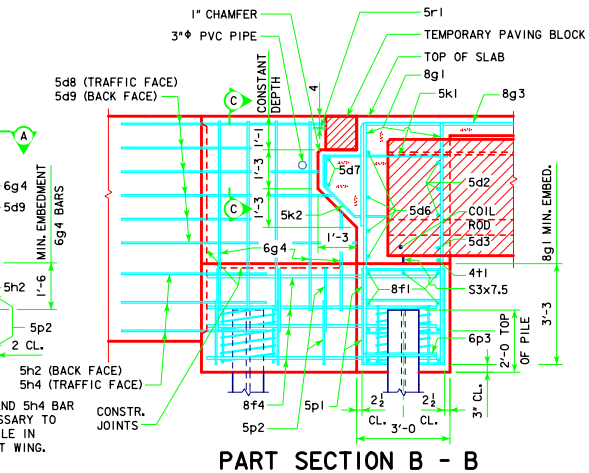

PART SECTION B - B

ABUTMENT NOTES:

MINIMUM CLEAR DISTANCE FROM FACE OF CONCRETE TO NEAR REINFORCING BAR IS TO BE 2" UNLESS OTHERWISE NOTED OR SHOWN.

ABUTMENT PILES ARE TO BE DRIVEN TO THE DESIGN BEARING VALUE AS GIVEN IN THE ABUTMENT PILE SPACING TABLE.

NOTE:
THE SPIRAL AT THE TOP OF EACH PILE TO BE 7 TURNS OF NO. 2 BAR, 21" DIAMETER, 3" PITCH WITH 3 - $L\frac{1}{8} \times \frac{1}{8} \times \frac{1}{8}$ SPACERS PUNCHED TO HOLD SPIRAL.

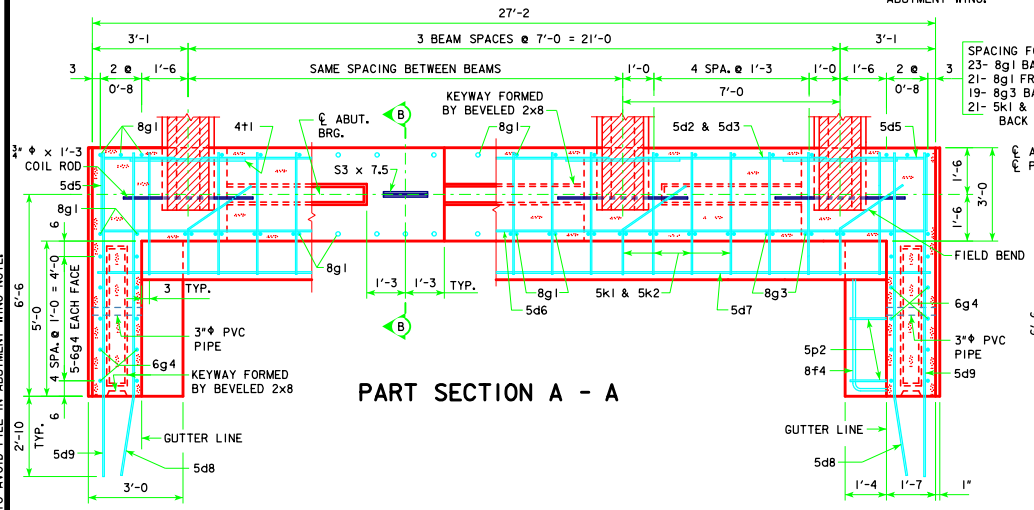

PART SECTION A - A

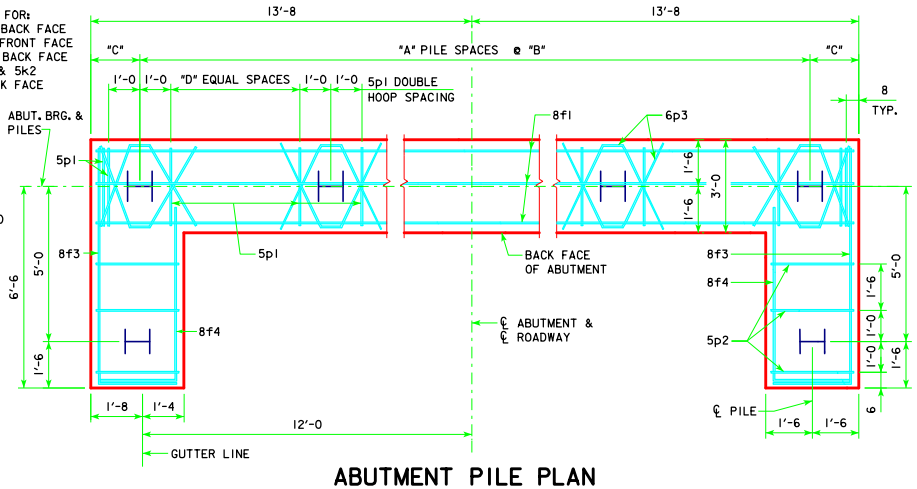

ABUTMENT PILE PLAN

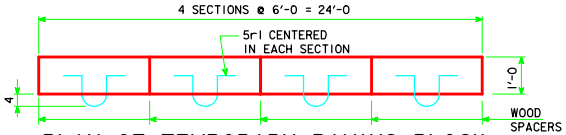

PLAN OF TEMPORARY PAVING BLOCK

NOTE :
LINE PAVING NOTCH WITH TAR PAPER BEFORE PLACING THE TEMPORARY PAVING BLOCK.

ABUTMENT PILE SPACING	℄-℄ ABUT. BRG.	201'-4	213'-10	226'-4	243'-0
WITH STEEL H-PILES	"A" PILE SPACES	5	5	5	5
	"B" (FT. - IN.)	4'-6	4'-6	4'-6	4'-6
	"C" (FT. - IN.)	2'-5	2'-5	2'-5	2'-5
	"D" EQUAL SPACES	2	2	2	2
	NO. OF PILES PER ABUT.	8	8	8	8
(1)	PILE BEARING (TONS)	44	46	47	50
(2)	STRENGTH I DESIGN LOAD (KIPS)	128	132	136	144

(1) FOR DETERMINING ACTUAL PILE LENGTHS IN FIELD.
(2) FOR ESTIMATING PILE LENGTHS USING AASHTO LRFD SPECIFICATIONS.

01-12
LATEST REVISION DATE

APPROVED BY BRIDGE ENGINEER

Iowa Department of Transportation
Highway Division

STANDARD DESIGN - 24' ROADWAY, THREE SPAN BRIDGE

PRETENSIONED PRESTRESSED CONCRETE BEAM BRIDGES

DECEMBER, 2006

ABUTMENT DETAILS

0° SKEW C BEAMS

H24-06-06

REVISED 01-12 - ADDED FIELD BEND 5h4 BAR TO AVOID PILE IN ABUTMENT WING NOTE.