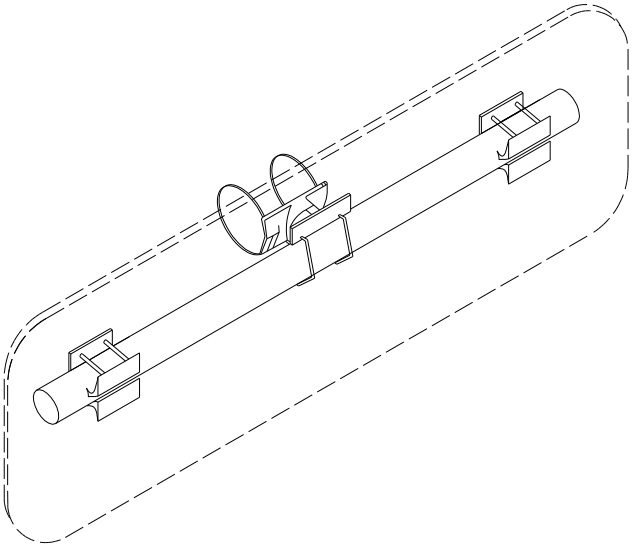

STREET NAME SIGN

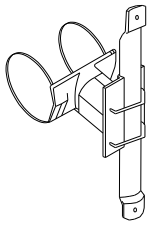

TRAFFIC SIGN

REV.	DATE	BY	MAST ARM SIGN BRACKET	FIGURE: 8010.10
DATE: 01-01-98				SHEET 1 OF 1