1. Install four #4 diagonal bars at manhole opening and at all pipe openings.
2. Cast-in-place base shown. If base is precast integral with walls, the footprint of the base is not required to extend beyond the outer edge of the walls.
3. 12 inch minimum wall height above all pipes.

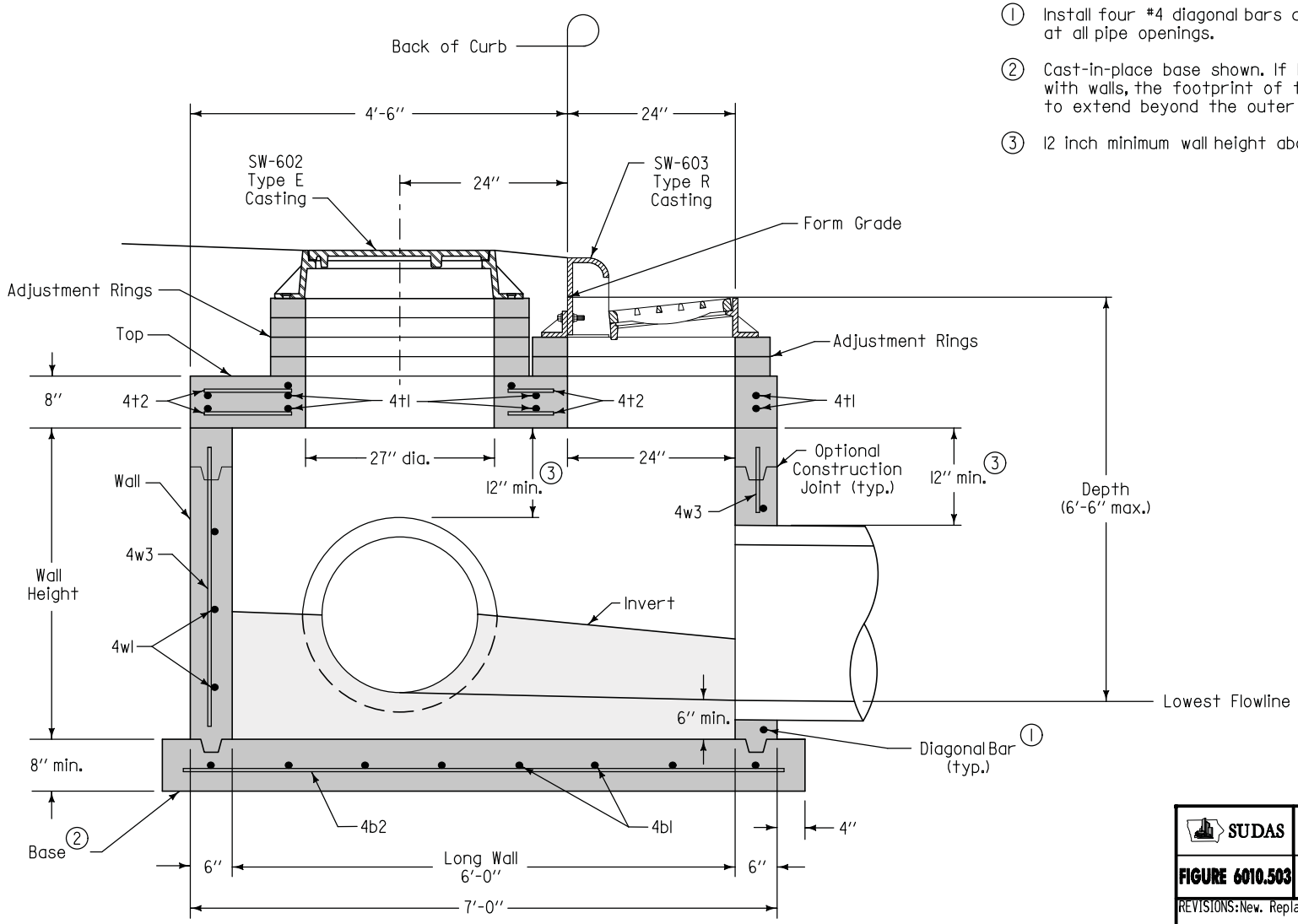

TYPICAL SECTION

SUDAS	Iowa Department of Transportation	REVISION NEW 04-21-09
FIGURE 6010.503	STANDARD ROAD PLAN	SW-503 SHEET 1 of 2

REVISIONS: New. Replaces SUDAS Type "M-C" Intake.

SUDAS DIRECTOR — DESIGN METHODS ENGINEER

SINGLE GRATE INTAKE WITH MANHOLE

FIGURE 6010.503 SHEET 1 OF 2

① Install four #4 diagonal bars at manhole opening and at all pipe openings.

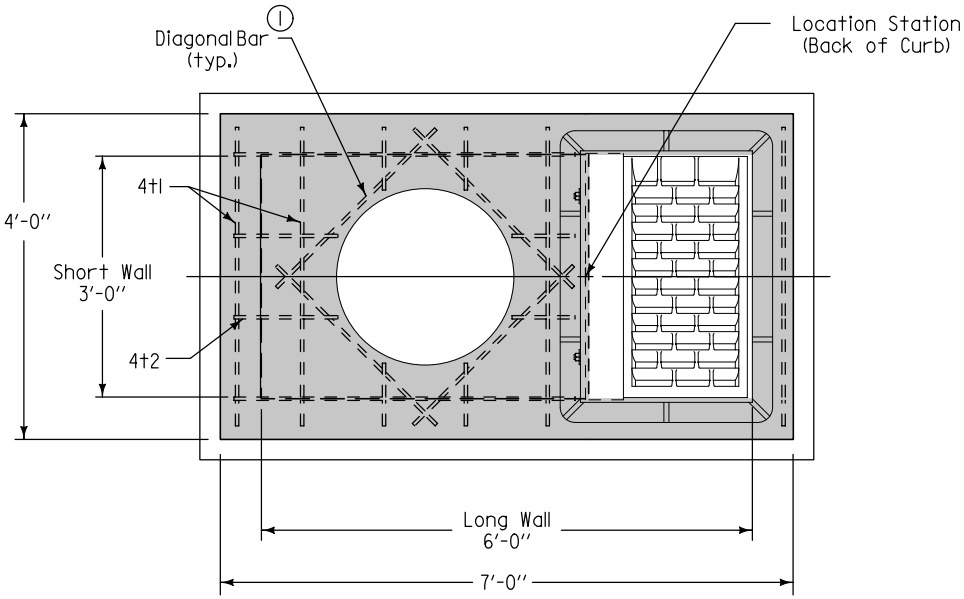

PLAN

REINFORCING BAR LIST						
Mark	Size	Location	Shape	Count	Length	Spacing
4t1	4	Top	——	12	3'-8"	12"
4t2	4	Top	——	8	4'-2"	12"
4b1	4	Base	——	7	4'-2"	13"
4b2	4	Base	——	5	7'-2"	10"
4w1	4	Short Walls	——	Varies	3'-8"	12"
4w2	4	Long Walls	——	Varies	6'-8"	12"
4w3	4	Walls	——	18	Wall Height minus 4"	13"

MAXIMUM PIPE DIAMETERS		
Pipe Location	Precast Structure	Cast-in-place Structure
Short Wall	24"	30"
Long Wall	30"	36"

SUDAS | Iowa Department of Transportation

REVISION: NEW 04-21-09

FIGURE 6010.503 | **STANDARD ROAD PLAN** | **SW-503** SHEET 2 of 2

REVISIONS: New. Replaces SUDAS Type "M-C" Intake.

SUDAS DIRECTOR | Deanna Maifield DESIGN METHODS ENGINEER

SINGLE GRATE INTAKE WITH MANHOLE