BILL OF REINFORCING FOR ONE HEADWALL 0° SKEW CULVERT SPAN x CULVERT HEIGHT

LOCATION	SHAPE	BAR	12' X 12' NO.	12' X 12' LENGTH	12' X 12' WT.	12' X 10' NO.	12' X 10' LENGTH	12' X 10' WT.	12' X 8' NO.	12' X 8' LENGTH	12' X 8' WT.	12' X 6' NO.	12' X 6' LENGTH	12' X 6' WT.	10' X 12' NO.	10' X 12' LENGTH	10' X 12' WT.	10' X 10' NO.	10' X 10' LENGTH	10' X 10' WT.	10' X 8' NO.	10' X 8' LENGTH	10' X 8' WT.	10' X 6' NO.	10' X 6' LENGTH	10' X 6' WT.	8' X 10' NO.	8' X 10' LENGTH	8' X 10' WT.	8' X 8' NO.	8' X 8' LENGTH	8' X 8' WT.	8' X 6' NO.	8' X 6' LENGTH	8' X 6' WT.	BAR
FENCE ANCHOR (GALV.)		5fa	2	3'-1	6	2	3'-1	6	2	3'-1	6	2	3'-1	6	2	3'-1	6	2	3'-1	6	2	3'-1	6	2	3'-1	6	2	3'-1	6	2	3'-1	6	2	3'-1	6	5fa
WINGWALL, B.F.H.		4b1	2	40'-11	57	2	34'-9	46	2	28'-7	38	2	22'-5	30	2	40'-11	57	2	34'-9	46	2	28'-7	38	2	22'-5	30	2	34'-9	46	2	28'-7	38	2	22'-5	30	4b1
WINGWALL, B.F.H.		4b2	20 VAR	2 EACH 11'-8 TO 39'-6	342	16 VAR	2 EACH 11'-8 TO 33'-4	240	12 VAR	2 EACH 11'-8 TO 27'-2	156	8 VAR	2 EACH 11'-8 TO 21'-0	87	20 VAR	2 EACH 11'-8 TO 39'-6	342	16 VAR	2 EACH 11'-8 TO 33'-4	240	12 VAR	2 EACH 11'-8 TO 27'-2	156	8 VAR	2 EACH 11'-8 TO 21'-0	87	16 VAR	2 EACH 11'-8 TO 33'-4	240	12 VAR	2 EACH 11'-8 TO 27'-2	156	8 VAR	2 EACH 11'-8 TO 21'-0	87	4b2
WINGWALL, F.F.H.		5b3	2	40'-11	90	2	34'-9	72	2	28'-7	60	2	22'-5	47	2	40'-11	90	2	34'-9	72	2	28'-7	60	2	22'-5	47	2	34'-9	72	2	28'-7	60	2	22'-5	47	5b3
WINGWALL, F.F.H.		5b4	22 VAR	2 EACH 8'-7 TO 39'-6	552	18 VAR	2 EACH 8'-7 TO 33'-4	393	14 VAR	2 EACH 8'-7 TO 27'-2	261	10 VAR	2 EACH 8'-7 TO 21'-0	154	22 VAR	2 EACH 8'-7 TO 39'-6	552	18 VAR	2 EACH 8'-7 TO 33'-4	393	14 VAR	2 EACH 8'-7 TO 27'-2	261	10 VAR	2 EACH 8'-7 TO 21'-0	154	18 VAR	2 EACH 8'-7 TO 33'-4	394	14 VAR	2 EACH 8'-7 TO 27'-2	261	10 VAR	2 EACH 8'-7 TO 21'-0	154	5b4
CENTER WALL, BOTH F.H.		5b5	21 VAR	4'-10 TO 27'-3	351	17 VAR	4'-10 TO 23'-3	249	13 VAR	4'-11 TO 19'-3	164	9 VAR	5'-1 TO 15'-3	95	21 VAR	4'-10 TO 27'-3	351	17 VAR	4'-10 TO 23'-3	249	13 VAR	4'-11 TO 19'-3	164	9 VAR	5'-1 TO 15'-3	95	17 VAR	4'-10 TO 23'-3	249	13 VAR	4'-11 TO 19'-3	164	9 VAR	5'-1 TO 15'-3	95	5b5
WINGWALL, F.F.V.		4c1	76 VAR	2 EACH 2'-10 TO 14'-10	448	64 VAR	2 EACH 2'-10 TO 12'-11	337	52 VAR	2 EACH 2'-10 TO 11'-0	240	40 VAR	2 EACH 2'-10 TO 9'-0	158	76 VAR	2 EACH 2'-9 TO 14'-9	444	64 VAR	2 EACH 2'-9 TO 12'-10	333	52 VAR	2 EACH 2'-9 TO 10'-11	237	40 VAR	2 EACH 2'-9 TO 8'-11	156	64 VAR	2 EACH 2'-7 TO 12'-8	326	52 VAR	2 EACH 2'-7 TO 10'-9	232	40 VAR	2 EACH 2'-7 TO 8'-9	151	4c1
WINGWALL, F.F.V.		4c2	4	13'-7	36	2	12'-0	16	2	10'-0	13	2	8'-0	11	4	13'-7	36	2	12'-0	16	2	10'-0	13	2	8'-0	11	2	12'-0	16	2	10'-0	13	2	8'-0	11	4c2
CENTER WALL, BOTH F.V.		4c3	2	1'-9	2	2	1'-9	2	2	1'-9	2	2	1'-9	2	2	1'-8	2	2	1'-8	2	2	1'-8	2	2	1'-8	2	2	1'-6	2	2	1'-6	2	2	1'-6	2	4c3
CENTER WALL, BOTH F.V.		4c4	50 VAR	2'-0 TO 12'-11	249	42 VAR	2'-0 TO 10'-11	181	34 VAR	1'-11 TO 8'-10	122	26 VAR	1'-11 TO 6'-10	76	50 VAR	1'-11 TO 12'-10	246	42 VAR	1'-11 TO 10'-10	179	34 VAR	1'-10 TO 8'-9	120	26 VAR	1'-10 TO 6'-9	75	42 VAR	1'-9 TO 10'-8	174	34 VAR	1'-8 TO 8'-7	116	26 VAR	1'-8 TO 6'-7	72	4c4
WINGWALL, B.F.V.		5c5	12 VAR	2 EACH 2'-10 TO 4'-6	46	12 VAR	2 EACH 2'-10 TO 4'-6	46	12 VAR	2 EACH 2'-10 TO 4'-6	46	12 VAR	2 EACH 2'-10 TO 4'-6	46	12 VAR	2 EACH 2'-9 TO 4'-5	45	12 VAR	2 EACH 2'-9 TO 4'-5	45	12 VAR	2 EACH 2'-9 TO 4'-5	45	12 VAR	2 EACH 2'-9 TO 4'-5	45	12 VAR	2 EACH 2'-7 TO 4'-3	43	12 VAR	2 EACH 2'-7 TO 4'-3	43	12 VAR	2 EACH 2'-7 TO 4'-3	43	5c5
WINGWALL, B.F.V.		5c6	64 VAR	2 EACH 8'-10 TO 18'-10	923	52 VAR	2 EACH 8'-10 TO 16'-11	698	40 VAR	2 EACH 8'-10 TO 15'-0	497	28 VAR	2 EACH 8'-10 TO 13'-0	319	64 VAR	2 EACH 8'-9 TO 18'-9	918	52 VAR	2 EACH 8'-9 TO 16'-10	694	40 VAR	2 EACH 8'-9 TO 14'-11	494	28 VAR	2 EACH 8'-9 TO 12'-11	316	52 VAR	2 EACH 8'-7 TO 16'-8	685	40 VAR	2 EACH 8'-7 TO 14'-9	487	28 VAR	2 EACH 8'-7 TO 12'-9	312	5c6
WINGWALL, B.F.V.		5c7	50	10'-6	548	38	10'-6	416	26	10'-6	285	-	-	-	50	10'-6	548	38	10'-6	416	26	10'-6	285	-	-	-	38	10'-6	416	26	10'-6	285	-	-	-	5c7
WINGWALL, B.F.V.		5c8	4	17'-7	73	2	16'-11	35	2	15'-0	31	2	13'-0	27	4	17'-6	73	2	16'-10	35	2	14'-11	31	2	12'-11	27	2	16'-8	35	2	14'-9	31	2	12'-9	27	5c8
APRON, LONGIT.,BOTT.		4d1	17	27'-6	312	17	23'-6	267	17	19'-6	221	17	15'-6	176	15	27'-6	276	15	23'-6	235	15	19'-6	195	15	15'-6	155	11	23'-6	173	11	19'-6	143	11	15'-6	114	4d1
APRON, LONGIT.,BOTT.		4d2	6	35'-8	143	6	29'-6	118	6	23'-5	94	6	17'-4	69	6	35'-8	143	6	29'-6	118	6	23'-5	94	6	17'-4	69	6	29'-6	118	6	23'-5	94	6	17'-4	69	4d2
APRON, LONGIT.,TOP		6f1	24	27'-6	991	24	23'-6	847	24	19'-6	703	24	15'-6	559	20	27'-6	826	20	23'-6	706	20	19'-6	586	20	15'-6	466	16	23'-6	565	16	19'-6	469	16	15'-6	372	6f1
APRON, LONGIT.,TOP		6f2	16 VAR	2 EACH 5'-10 TO 24'-10	368	14 VAR	2 EACH 4'-6 TO 20'-10	266	10 VAR	2 EACH 5'-10 TO 16'-10	170	8 VAR	2 EACH 4'-6 TO 12'-10	104	16 VAR	2 EACH 5'-10 TO 24'-10	368	14 VAR	2 EACH 4'-6 TO 20'-10	266	10 VAR	2 EACH 5'-10 TO 16'-10	170	8 VAR	2 EACH 4'-6 TO 12'-10	104	14 VAR	2 EACH 4'-6 TO 20'-10	266	10 VAR	2 EACH 5'-10 TO 16'-10	170	8 VAR	2 EACH 4'-6 TO 12'-10	104	6f2
APRON, LONGIT.,TOP		6f3	2	40'-11	129	2	34'-9	104	2	28'-7	86	2	22'-5	67	2	40'-11	129	2	34'-9	104	2	28'-7	86	2	22'-5	67	2	34'-9	104	2	28'-7	86	2	22'-5	67	6f3
PARAPET, VERTICAL		4i1	51	6'-1	207	49	6'-1	199	49	6'-1	199	49	6'-1	199	43	6'-1	175	41	6'-1	167	41	6'-1	167	41	6'-1	167	33	6'-1	134	33	6'-1	134	33	6'-1	135	4i1
PARAPET, HORIZONTAL		7j1	4	26'-8	218	4	26'-2	214	4	26'-2	214	4	25'-11	212	4	22'-8	186	4	22'-2	181	4	22'-2	181	4	21'-11	179	4	18'-2	149	4	17'-11	146	4	17'-11	146	7j1
APRON, TRANS.,TOP		6m1	34 VAR	26'-10 TO 39'-3	1687	29 VAR	26'-4 TO 36'-10	1376	23 VAR	26'-4 TO 34'-7	1052	18 VAR	26'-1 TO 32'-6	792	34 VAR	22'-10 TO 35'-3	1483	29 VAR	22'-4 TO 32'-10	1201	23 VAR	22'-4 TO 30'-7	914	18 VAR	22'-1 TO 28'-5	683	29 VAR	18'-4 TO 28'-10	1027	23 VAR	18'-4 TO 26'-7	776	18 VAR	18'-1 TO 24'-6	576	6m1
APRON, TRANS.,BOTT.		6m2	24 VAR	20'-9 TO 32'-3	955	20 VAR	20'-7 TO 30'-1	761	16 VAR	20'-7 TO 28'-1	585	12 VAR	20'-6 TO 26'-0	419	24 VAR	16'-9 TO 28'-3	811	20 VAR	16'-7 TO 26'-1	641	16 VAR	16'-7 TO 24'-1	489	12 VAR	16'-6 TO 22'-0	347	20 VAR	12'-7 TO 22'-1	521	16 VAR	12'-7 TO 20'-1	393	12 VAR	12'-6 TO 18'-0	275	6m2
CURTAIN, HORIZONTAL		6p1	4	25'-6	154	4	25'-4	152	4	25'-4	152	4	25'-3	152	4	21'-6	129	4	21'-4	128	4	21'-4	128	4	21'-3	128	4	17'-4	104	4	17'-4	104	4	17'-3	104	6p1
CURTAIN, HORIZONTAL		6p2	8	18'-7	223	8	16'-1	193	8	13'-7	163	8	11'-10	142	8	18'-7	223	8	16'-1	193	8	13'-7	163	8	11'-10	142	8	16'-1	193	8	13'-7	163	8	11'-10	142	6p2
WING SLOPE, BOTH F.		6s1	4	7'-8	46	4	7'-8	46	4	7'-8	46	4	7'-8	46	4	7'-8	46	4	7'-8	46	4	7'-8	46	4	7'-8	46	4	7'-8	46	4	7'-8	46	4	7'-8	46	6s1
WING SLOPE, BOTH F.		6s2	4	37'-6	225	4	31'-0	186	4	24'-6	147	4	18'-0	108	4	37'-6	225	4	31'-0	186	4	24'-6	147	4	18'-0	108	4	31'-0	186	4	24'-6	147	4	18'-0	108	6s2
WING SLOPE, F.F		6s3	2	42'-9	134	2	36'-3	109	2	29'-9	89	2	23'-3	70	2	42'-9	134	2	36'-3	109	2	29'-9	89	2	23'-3	70	2	36'-3	109	2	29'-9	89	2	23'-3	70	6s3
CENTER WALL, BOTH F.		6s4	2	29'-10	90	2	25'-4	76	2	20'-10	63	2	16'-5	49	2	29'-10	90	2	25'-4	76	2	20'-10	63	2	16'-5	49	2	25'-4	76	2	20'-10	63	2	16'-5	49	6s4
CURTAIN, VERT.		5t1	41	8'-0	342	37	7'-6	289	33	7'-0	241	29	6'-6	197	39	8'-0	325	35	7'-6	274	31	7'-0	226	27	6'-6	183	31	7'-6	242	27	7'-0	197	23	6'-6	156	5t1
ESTIMATED QUANTITIES ONE HEADWALL	REINF. STEEL		9947 lbs.			7940 lbs.			6146 lbs.			4419 lbs.			9279 lbs.			7357 lbs.			5656 lbs.			4014 lbs.			6717 lbs.			5114 lbs.			3570 lbs.		
	CONCRETE	PARAPET △	2.7	88.1 cu. yd.		2.6	64.7 cu. yd.		2.6	49.0 cu. yd.		2.5	34.1 cu. yd.		2.4	80.1 cu. yd.		2.3	58.1 cu. yd.		2.3	43.6 cu. yd.		2.2	30.0 cu. yd.		2.0	50.3 cu. yd.		2.0	37.4 cu. yd.		1.9	25.2 cu. yd.	
		WINGWALLS	28.1			16.9			11.4			6.2			28.1			16.9			11.4			6.2			16.9			11.4			6.2		
		FOOTINGS	57.3			45.2			35.0			25.4			49.6			38.9			29.9			21.6			31.4			24.0			17.1		

BENT BAR DETAILS

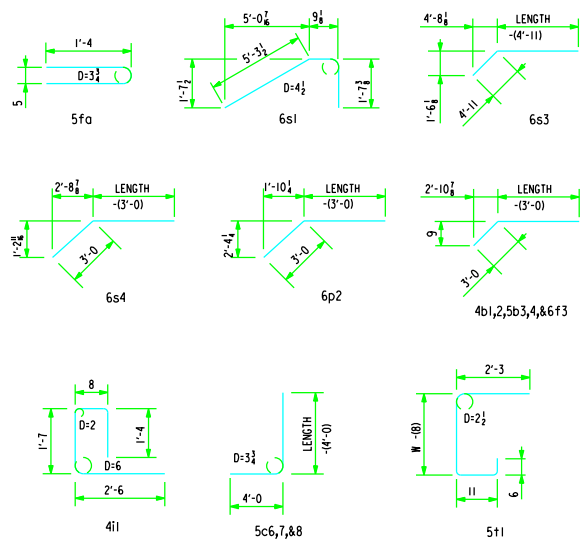

NOTE:
ALL DIMENSIONS ARE OUT TO OUT.
D = PIN DIAMETER.

△ NOTE: INCLUDES TOP OF WINGWALL QUANTITIES.

WEIGHT OF BARS OVER 40'-0 LONG INCLUDE AN ALLOWANCE OF 2'-0 FOR LAP.

NOTES:

1. SEE DRAWING TWRCB-G1-87 FOR GENERAL INFORMATION, SPECIFICATIONS, AND DESIGN STRESSES.

HEADWALL NOTES:

THIS HEADWALL IS BASED ON A 3:1 SLOPE NORMAL TO CENTERLINE OF ROADWAY.

THE SIDES OF THE FOOTING ARE TO BE FORMED TO INSURE CORRECT LINE AND GRADE.

ALL EXPOSED CORNERS OF 90° OR SHARPER ARE TO BE FILLETED WITH A ¾" DRESSED AND BEVELED STRIP.

ALL REINFORCING IS TO BE SECURELY WIRED IN PLACE BEFORE THE CONCRETE IS POURED. ALL SLAB AND FLOOR REINFORCING STEEL IS TO BE SUPPORTED BY BAR CHAIRS AT INTERVALS OF NOT MORE THAN 3'-0 IN EITHER DIRECTION AS OUTLINED IN THE STANDARD SPECIFICATIONS.

CLEAR DISTANCE FROM FACE OF CONCRETE TO NEAR REINFORCING BAR IS TO BE 2" UNLESS OTHERWISE NOTED OR SHOWN. CLEARANCE TO THE BOTTOM ENDS OF VERTICAL BARS SHALL BE 3 INCHES.

CONCRETE QUANTITIES ARE ESTIMATED FROM BACK OF PARAPET.

HORIZONTAL TAILS OF BARS "b" & "s" ESTIMATED TO EXTEND 2'-0 BEYOND BACK OF PARAPET (INTO END OF BARREL). LONGITUDINAL BARS "d", "6f1", AND "6f3" ESTIMATED TO PROJECT INTO END SECTION OF BARREL A MINIMUM OF 2'-0 BEYOND BACK OF PARAPET.

THE "LENGTH" COLUMN REFLECTS TOTAL NUMBER OF FEET NECESSARY TO MEET THESE REQUIREMENTS.

LATEST REVISION DATE : 02-10

APPROVED BY :

STANDARD DESIGN

FLARED WING HEADWALLS

FOR
TWIN REINFORCED CONCRETE BOX CULVERTS

IOWA DEPARTMENT OF TRANSPORTATION - HIGHWAY DIVISION

JULY , 1987

TWH 0-4-87

REVISED 02-10 - CHANGED THE 7j1 BAR LENGTH & WEIGHTS FOR THE 8x6 HEADWALL.
ENGLISHSIGNEDTWINCULVERTS.DGN - TWH 0-4-87